LAPPSET®

FINNO

ASENNUSOHJE
MONTERINGSANSVISNING
INSTALLATION INSTRUCTION
AUFBAUANLEITUNG
NOTICE D'INSTALLATION

DATE: 17.3.2020

137835

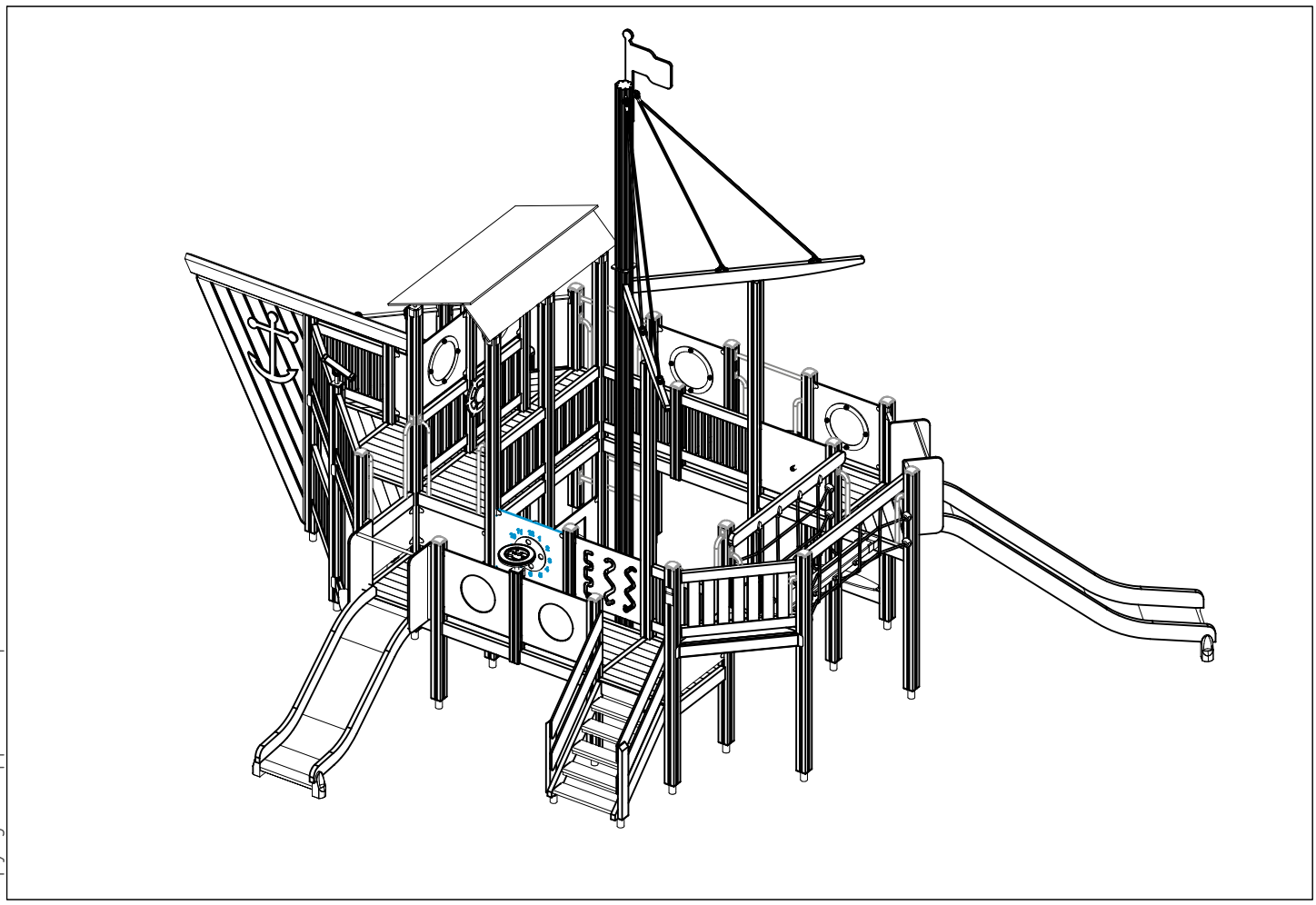

Copyright Lappset Group Ltd

LAPPSET®

FINNO

137835

DATE: 17.3.2020

008985	PCS	008986	PCS	702286	PCS	702339	PCS	704868−607	PCS	706308−701	PCS
	6		12		1		1		2		1
32x714x714		750x750		65x65		118x78		12x503x687		10x640x702	
706371−701	PCS	706439−603	PCS	706441−603	PCS	706443	PCS	706444−603	PCS	706450−603	PCS
	4		38		2		24		6		1
15x345x750		L 704		93x93x1550		32x45x702		93x93x3200		600x381x2685	
706452−603	PCS	706453	PCS	706461	PCS	706475−603	PCS	706484−603	PCS	706495	PCS
	1		4		3		1		14		1
600x780x1470		15x145x600		15x400x703		1387x1020x325		93x93x2150		15x900x1900	
706496	PCS	706505	PCS	706508	PCS	706510−603	PCS	706531	PCS	706533	PCS
	1		2		18		7		27		1
15x390x1900		35x70x730		32x45x650		45x120x1030		FASTENER KIT			
706534	PCS	706535	PCS	706537	PCS	706538	PCS	706547	PCS	706607	PCS
	3		12		6		9		1		1
FASTENER KIT		FASTENER KIT									
706727−701	PCS	706744	PCS	706746−608	PCS	706748	PCS	706766−701	PCS	706772−701	PCS
	1		1		8		8		1		1
10x702x640		15x145x380		45x640x701							
706778	PCS	706790−603	PCS	706885	PCS	706960	PCS	706997−608	PCS	706999	PCS
	2		2		1		1		4		4
		93x93x3500						45x640x984			

Copyright Lappset Group Ltd

LAPPSET®

FINNO

137835

DATE: 17.3.2020

707133	PCS	707145–603	PCS	707146–701	PCS	707154–603	PCS	707191–603	PCS	707209–701	PCS
	2		2		4		4		1		1
10x80x745		43x93x717		15x145x1153		93x93x900		+870		10x640x702	
707224	PCS	707304	PCS	707305–703	PCS	707320–702	PCS	707333	PCS	707374–603	PCS
	1		1		1		1		1		4
										L 1504	
707386–701	PCS	707401–608	PCS	707407–305	PCS	707410	PCS	707411	PCS	707446	PCS
	1		2		2		1		1		1
10x640x702		45x120x1680		1540x800							
707450	PCS	707453–701	PCS	707454	PCS	707585	PCS	707593–603	PCS	707597–603	PCS
	2		6		6		2		2		3
		10x640x702				FASTENER KIT		45x120x1030		140x140x450	
707600–305	PCS	707615	PCS	707625	PCS	707633–604	PCS	707640	PCS	707653–603	PCS
	1		1		2		1		1		1
						90x145x2855				32x1130x2110	
707680	PCS	707732	PCS	900240	PCS	901868	PCS	901879	PCS	903093	PCS
	1		14		20		6		4		168
				Ø8x70		Ø34x598				Ø8x90	
903112	PCS	905104	PCS	905138	PCS	905139	PCS	905196	PCS	905197	PCS
	3		24		16		3		16		3
L 750		M10		GRAY		69x69x20		GRAY		147x147x56.5	

Copyright Lappset Group Ltd

LAPPSET®

FINNO

137835

DATE: 17.3.2020

905879	PCS	907667–216	PCS	907688–216	PCS	907692–216	PCS	907694–216	PCS	907701–216	PCS
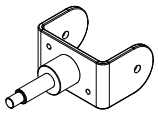	1	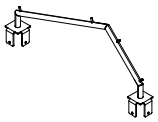	3		6		2	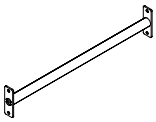 L 704	5		8
907920–216	PCS	908044–216	PCS	909511	PCS	909519	PCS	929325	PCS	929326	PCS
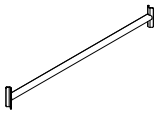 120x40x1029	2	Ø33,7x679	4	90x90x650	27	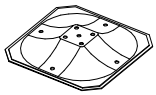 50x380x380	27	40x40x1080	1	40x40x3x2095	1
980114	PCS	980123	PCS	980128	PCS	980131	PCS	909506	PCS		PCS
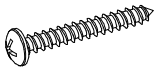 Ø4x20	4	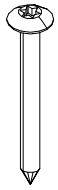 Ø7x60	16	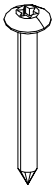 Ø7x40	16	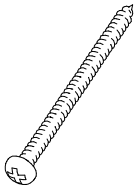 Ø6x60	76	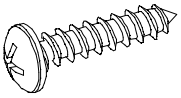 Ø3.5x13	4		
	PCS		PCS		PCS		PCS		PCS		PCS
	PCS		PCS		PCS		PCS		PCS		PCS
	PCS		PCS		PCS		PCS		PCS		PCS
	PCS		PCS		PCS		PCS		PCS		PCS

Copyright Lappset Group Ltd

LAPPSET®
FINNO

137835

DATE: 17.3.2020

4

EN/AS Impact Area 66.7 m2
Grid size = 1000 mm

1:75
0 3

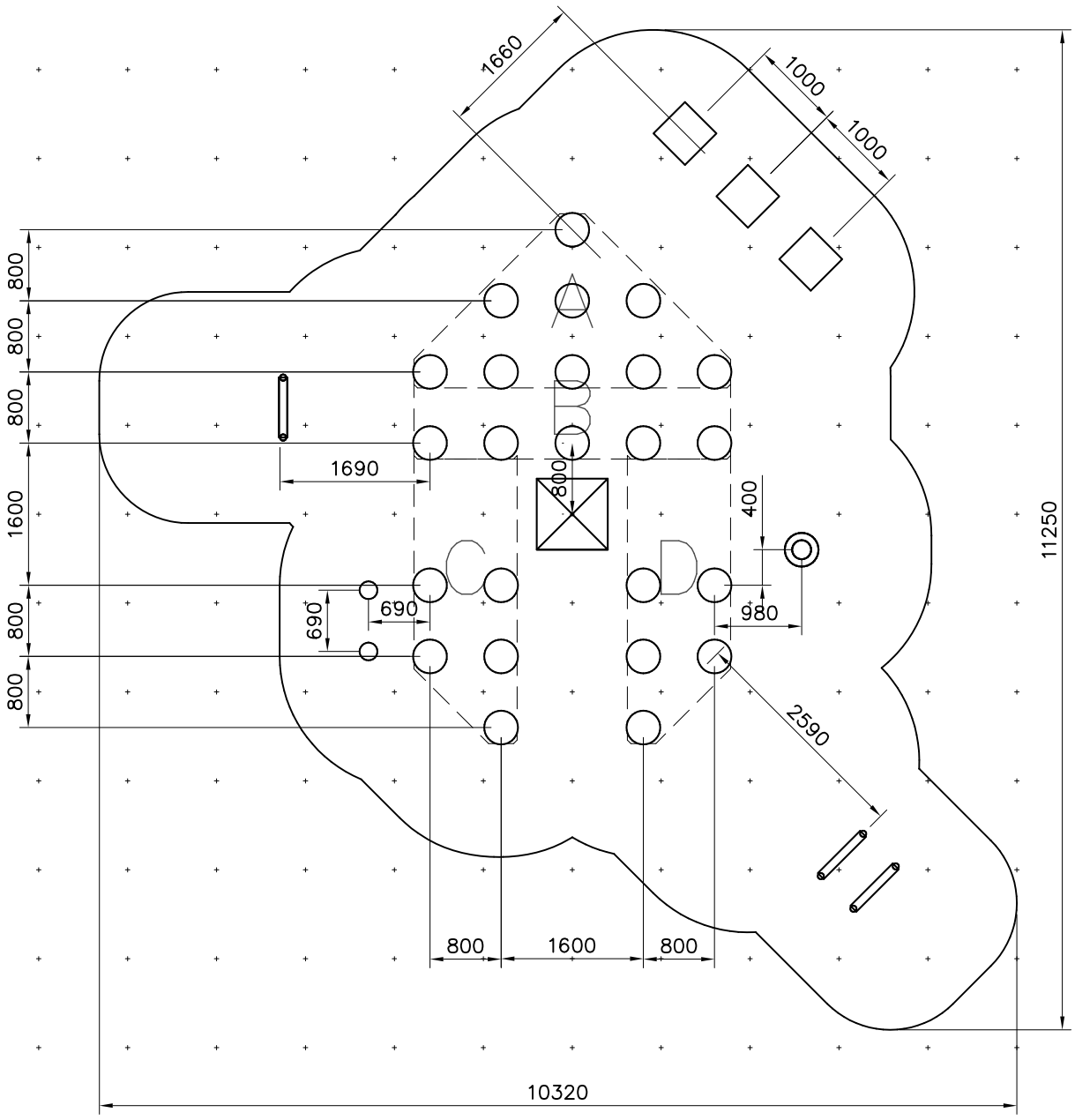

Copyright Lappset Group Ltd

LAPPSET®
FINNO

137835

DATE: 17.3.2020

EN/AS Impact Area 66.7 m2

Falling Space 73.8 m2

Max Falling Height 1470 mm

1:75

0 3

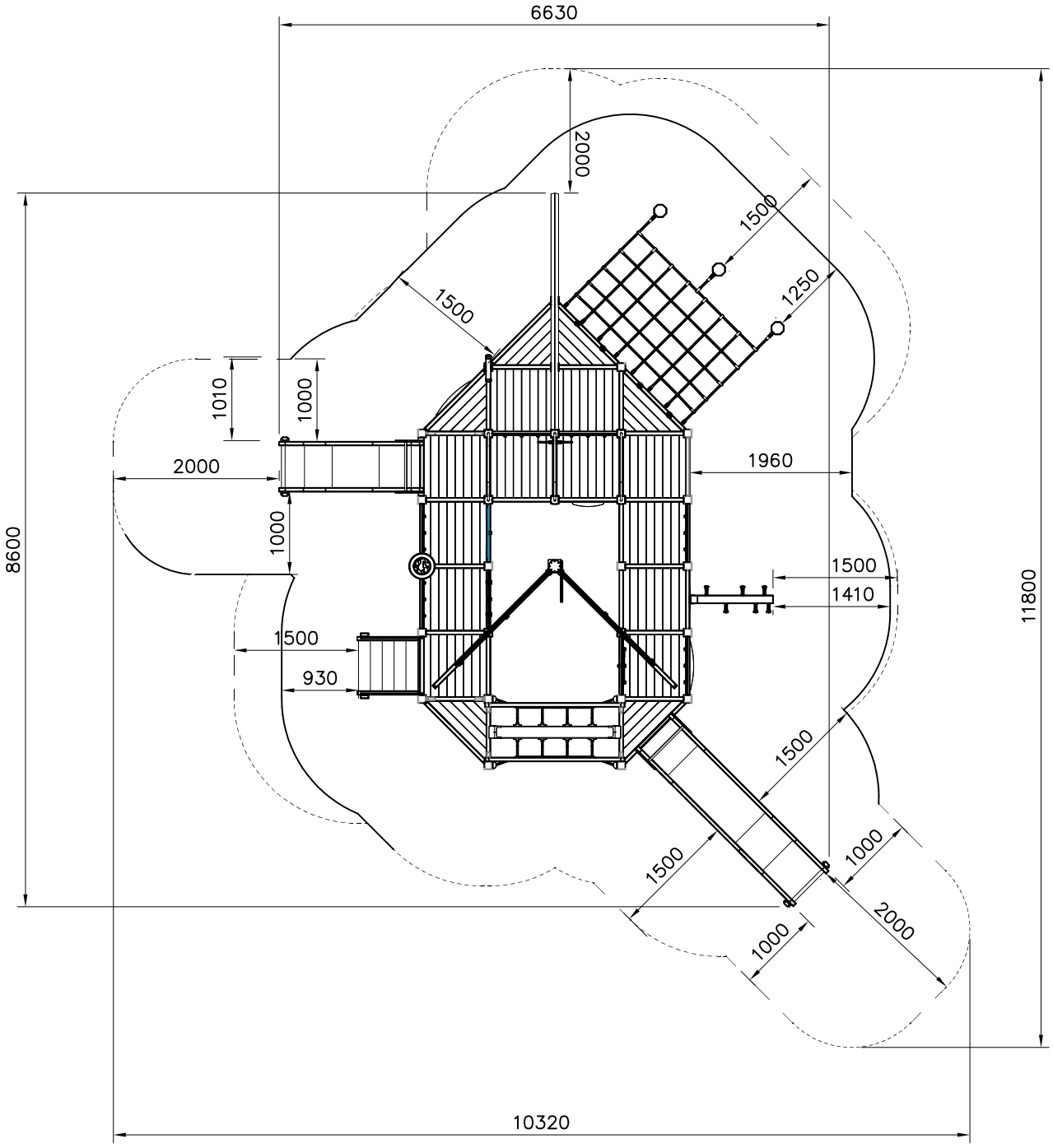

Copyright Lappset Group Ltd

LAPPSET®

FINNO

137835

DATE: 17.3.2020

5A

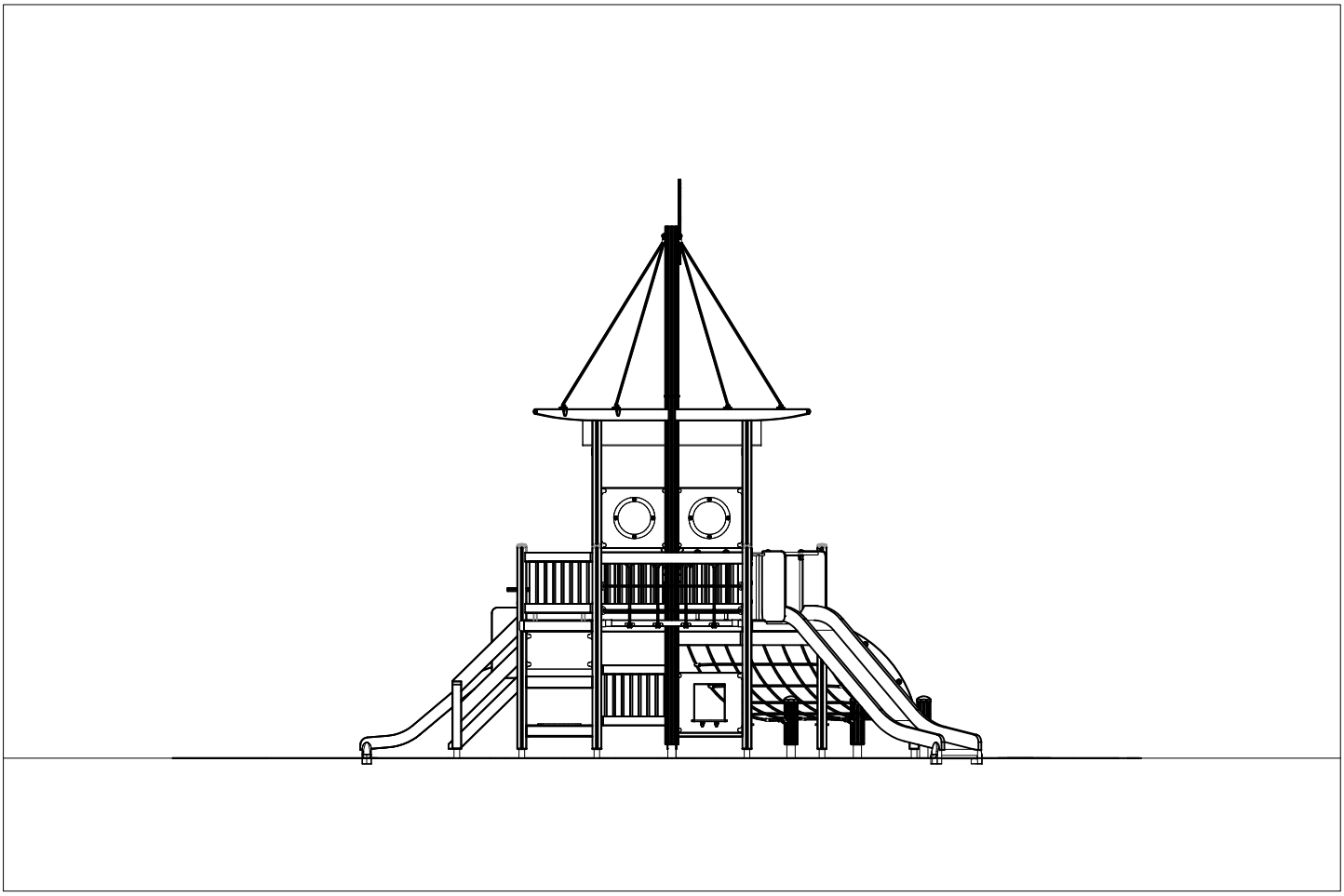

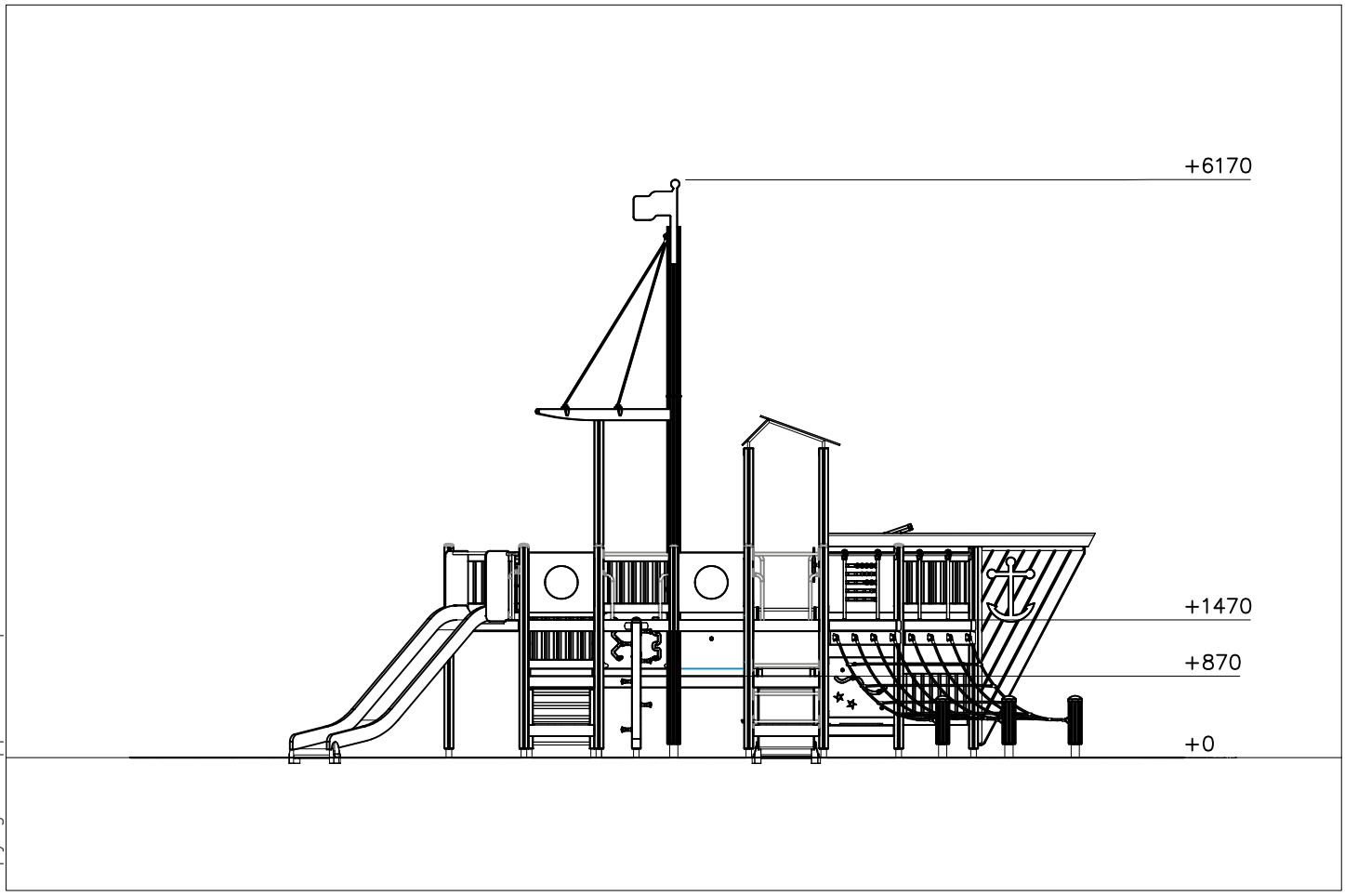

Copyright Lappset Group Ltd

LAPPSET®
FINNO

137835

DATE: 17.3.2020

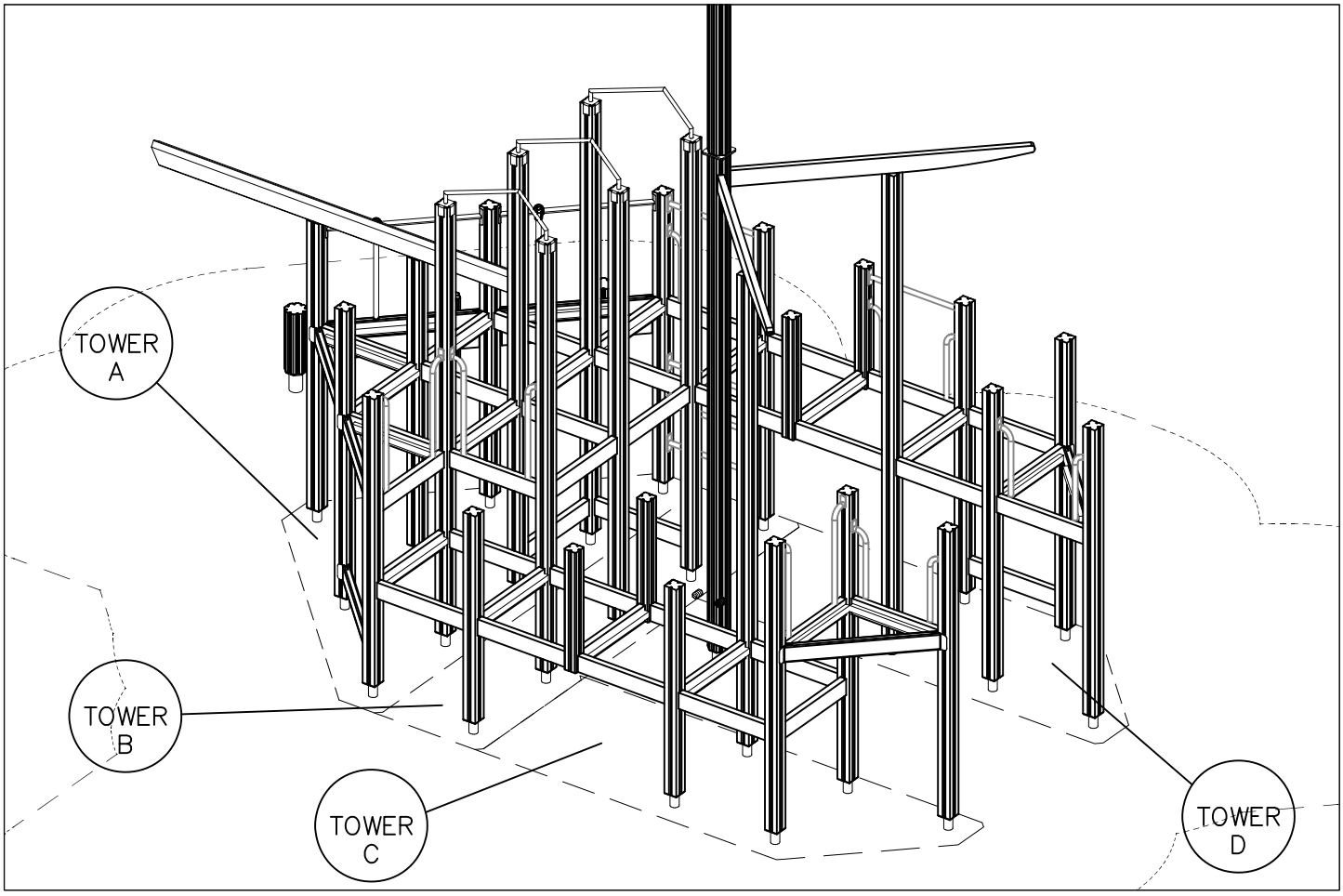

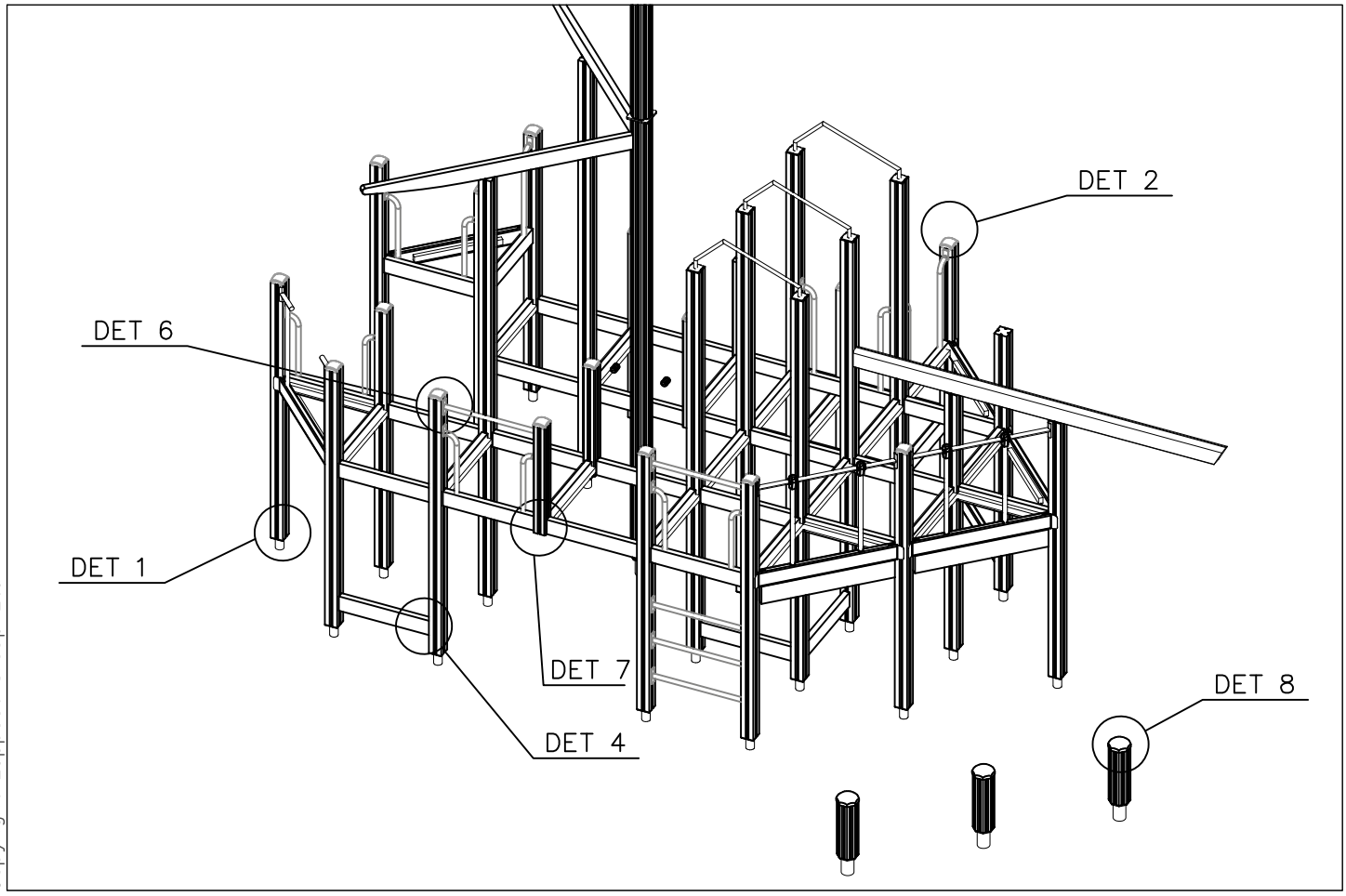

Copyright Lappset Group Ltd

LAPPSET®

FINNO

137835

DATE: 17.3.2020

6A

DET 1

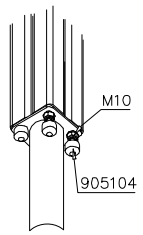

DET 2

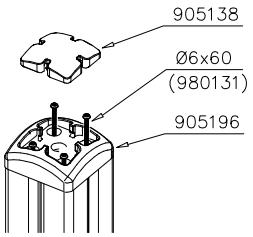

DET 3

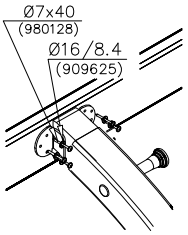

DET 4

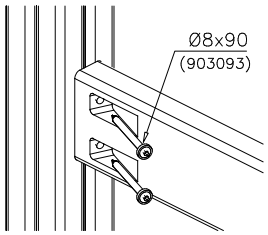

DET 5

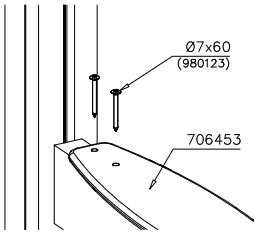

DET 6

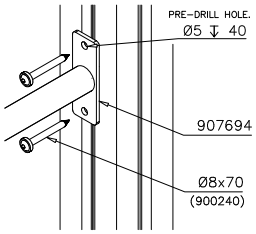

DET 7

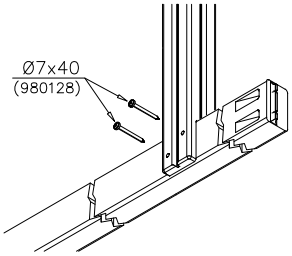

DET 8

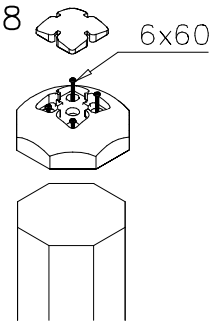

Copyright Lappset Group Ltd

LAPPSET®
FINNO

137835

TOWER A

DATE: 17.3.2020

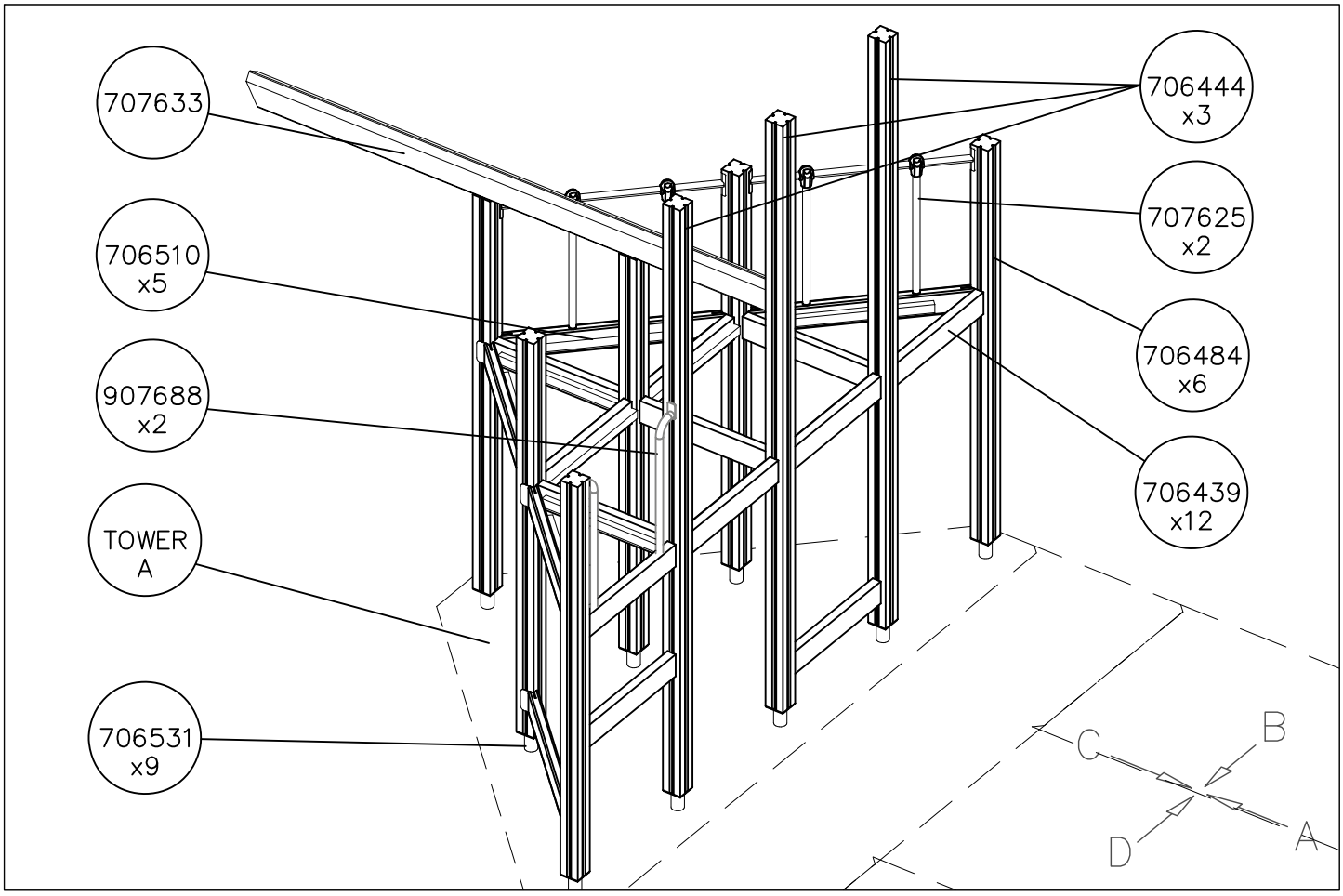

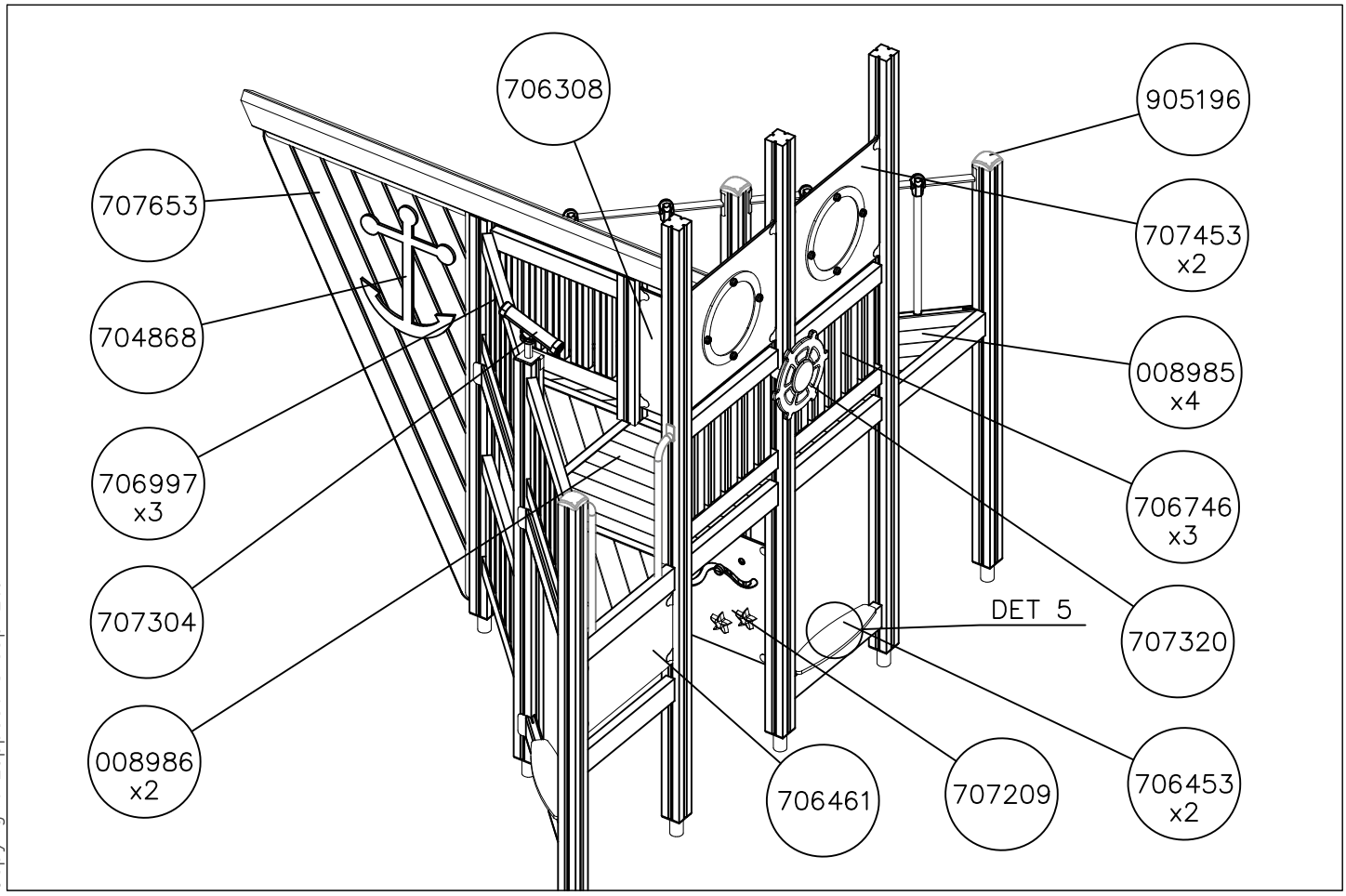

Copyright Lappset Group Ltd

LAPPSET®
FINNO

137835

TOWER A
7a

DATE: 17.3.2020

1:50

A

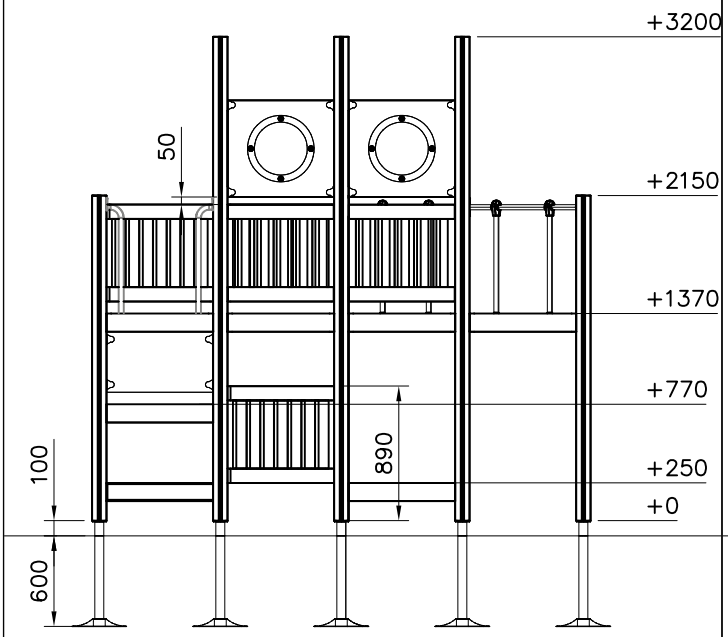

B

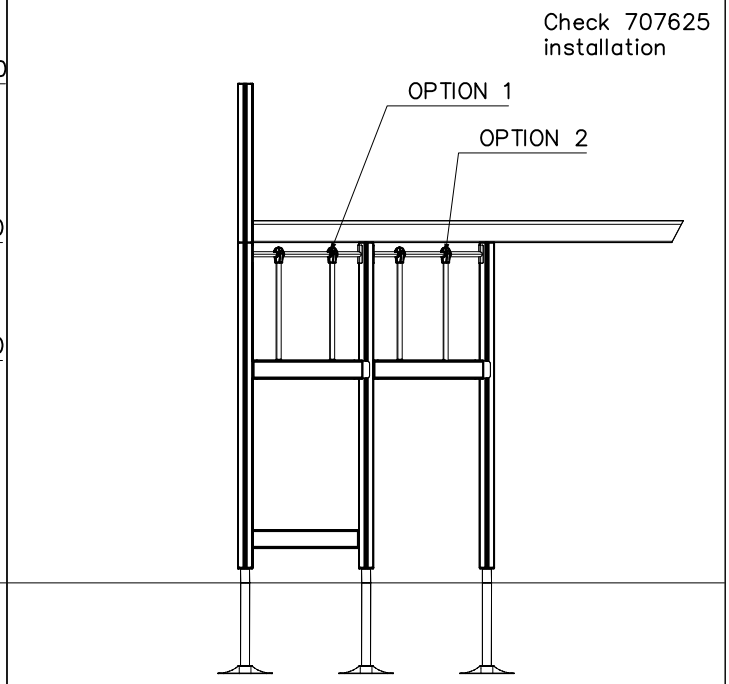

C

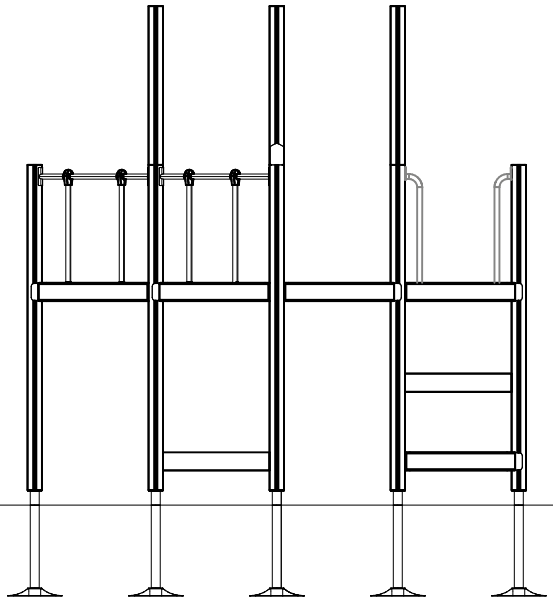

D

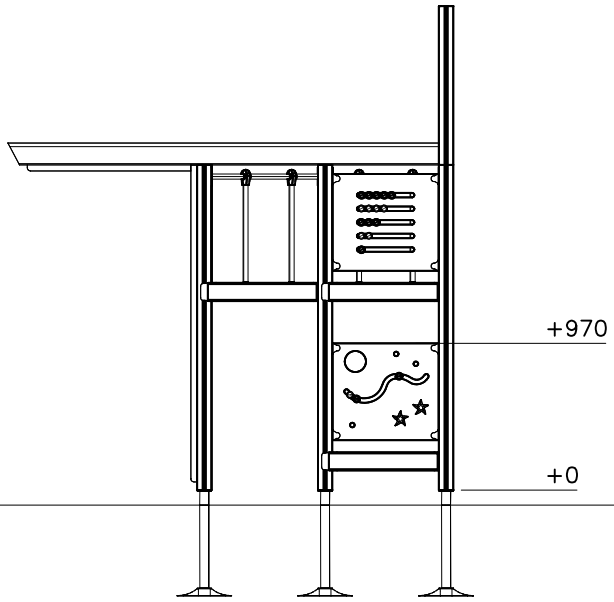

Copyright Lappset Group Ltd

LAPPSET®
FINNO

137835

DATE: 17.3.2020

TOWER B
7b

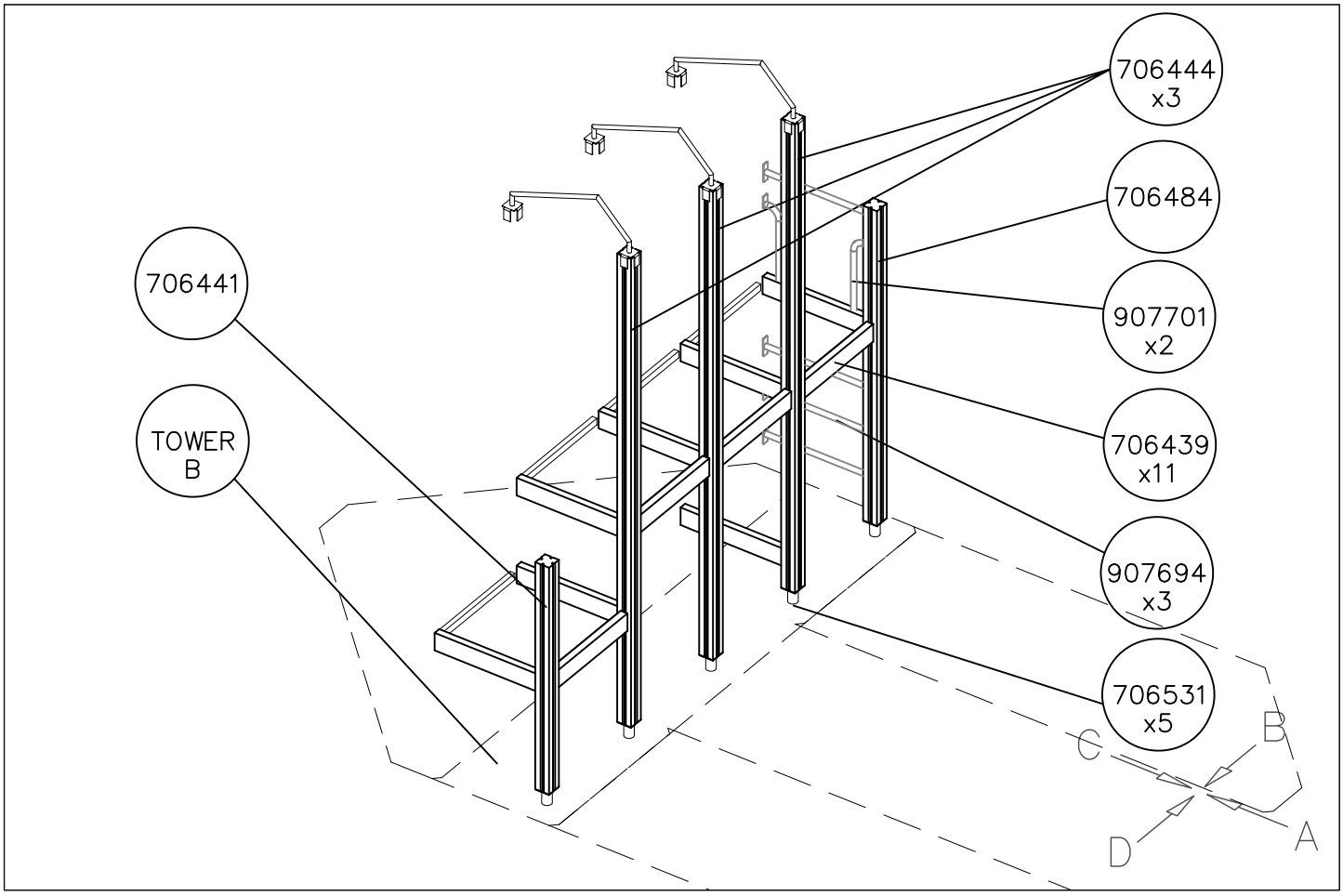

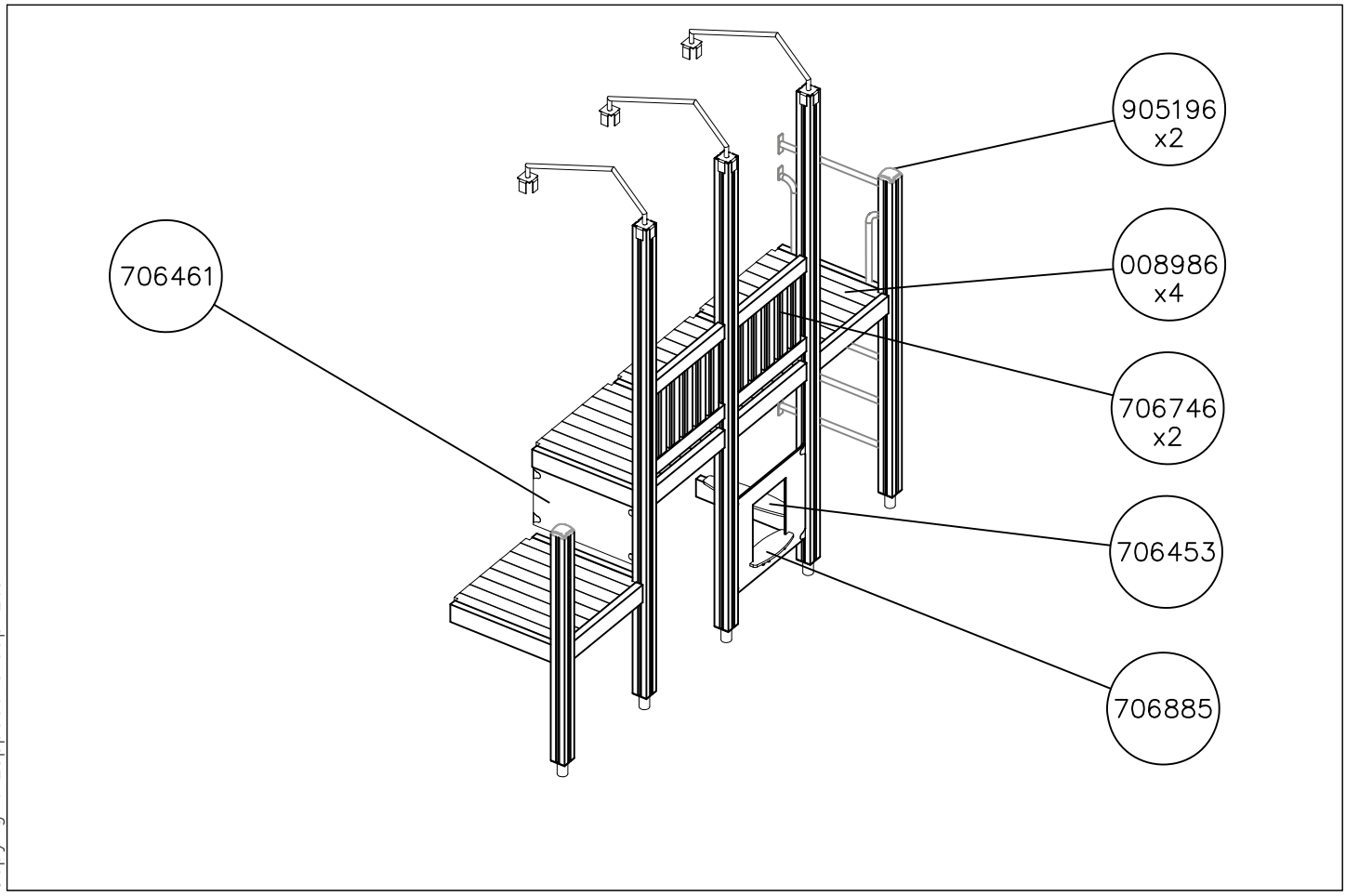

Copyright Lappset Group Ltd

LAPPSET®
FINNO

137835

TOWER B
7c

DATE: 17.3.2020

1:50

A

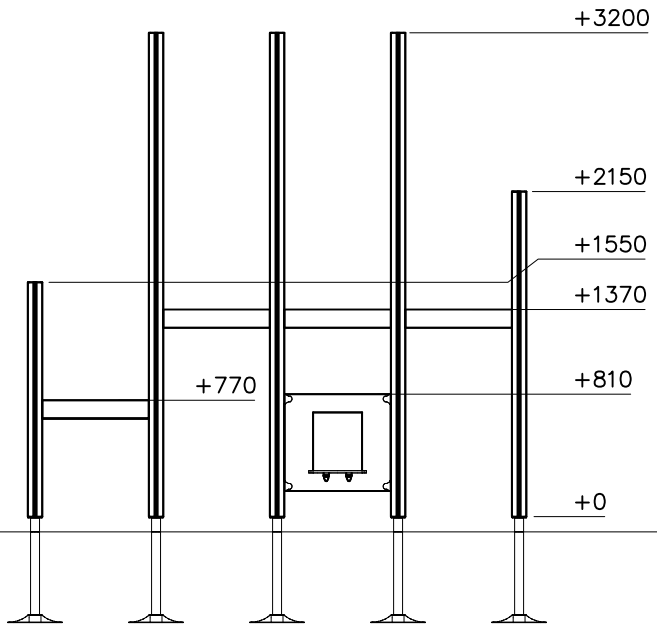

B

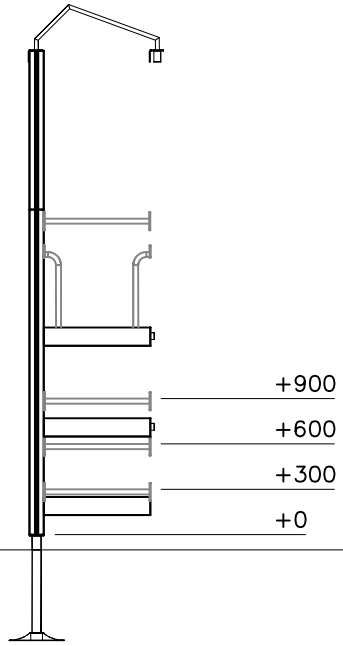

C

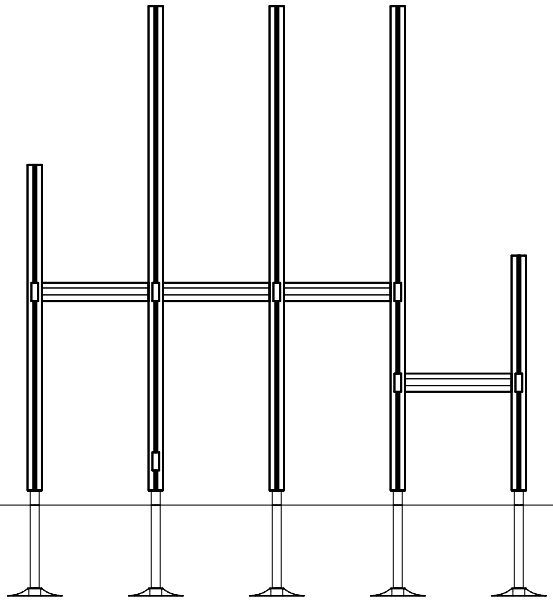

D

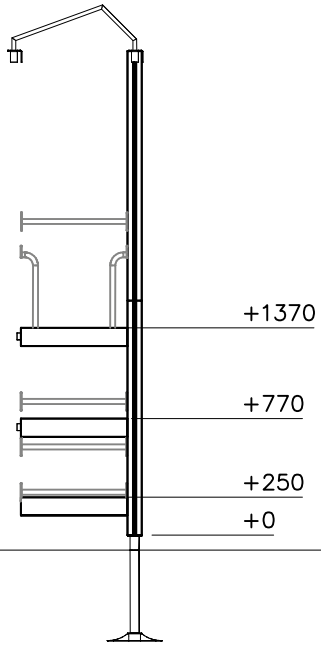

Copyright Lappset Group Ltd

LAPPSET®
FINNO

137835

TOWER C
7d

DATE: 17.3.2020

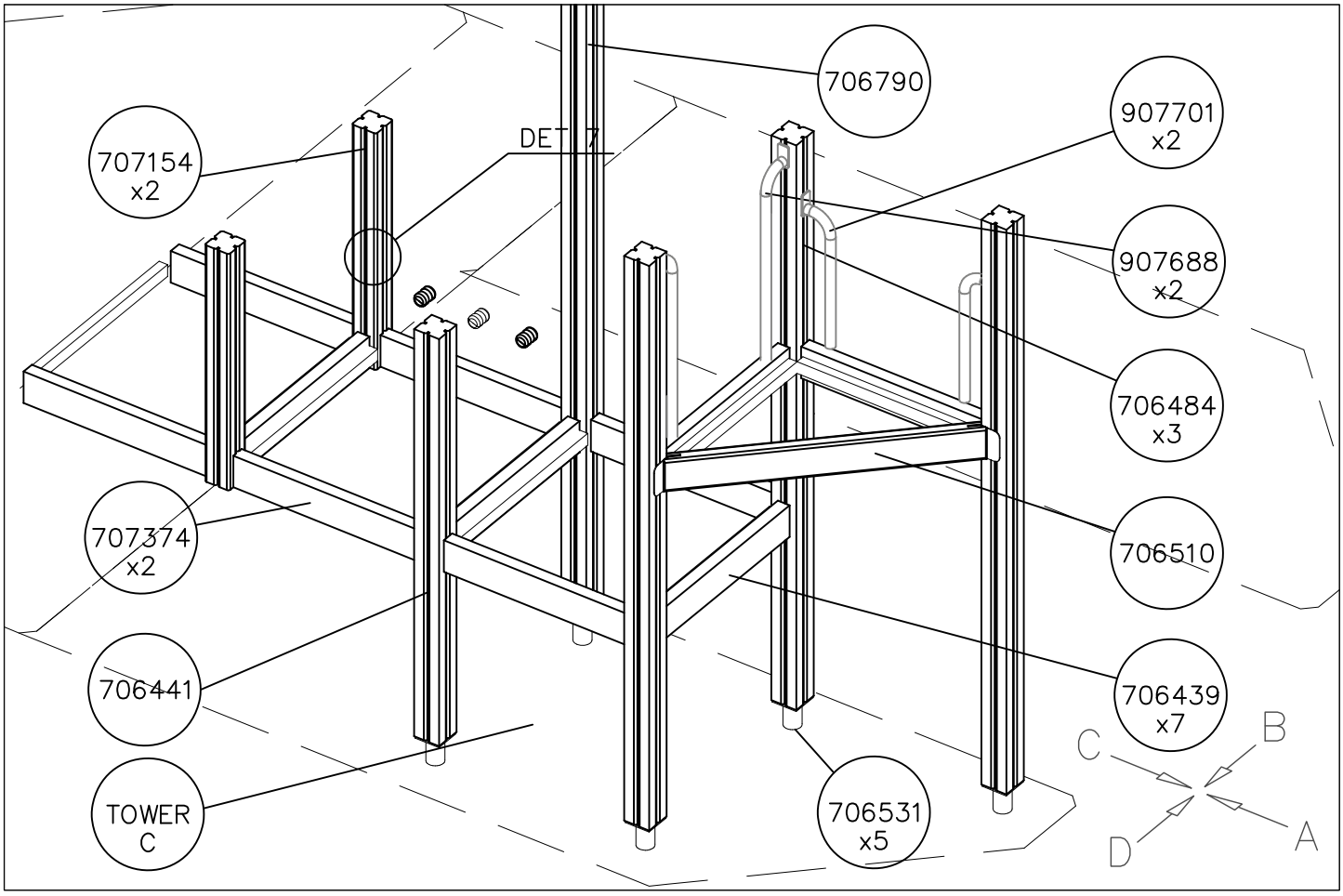

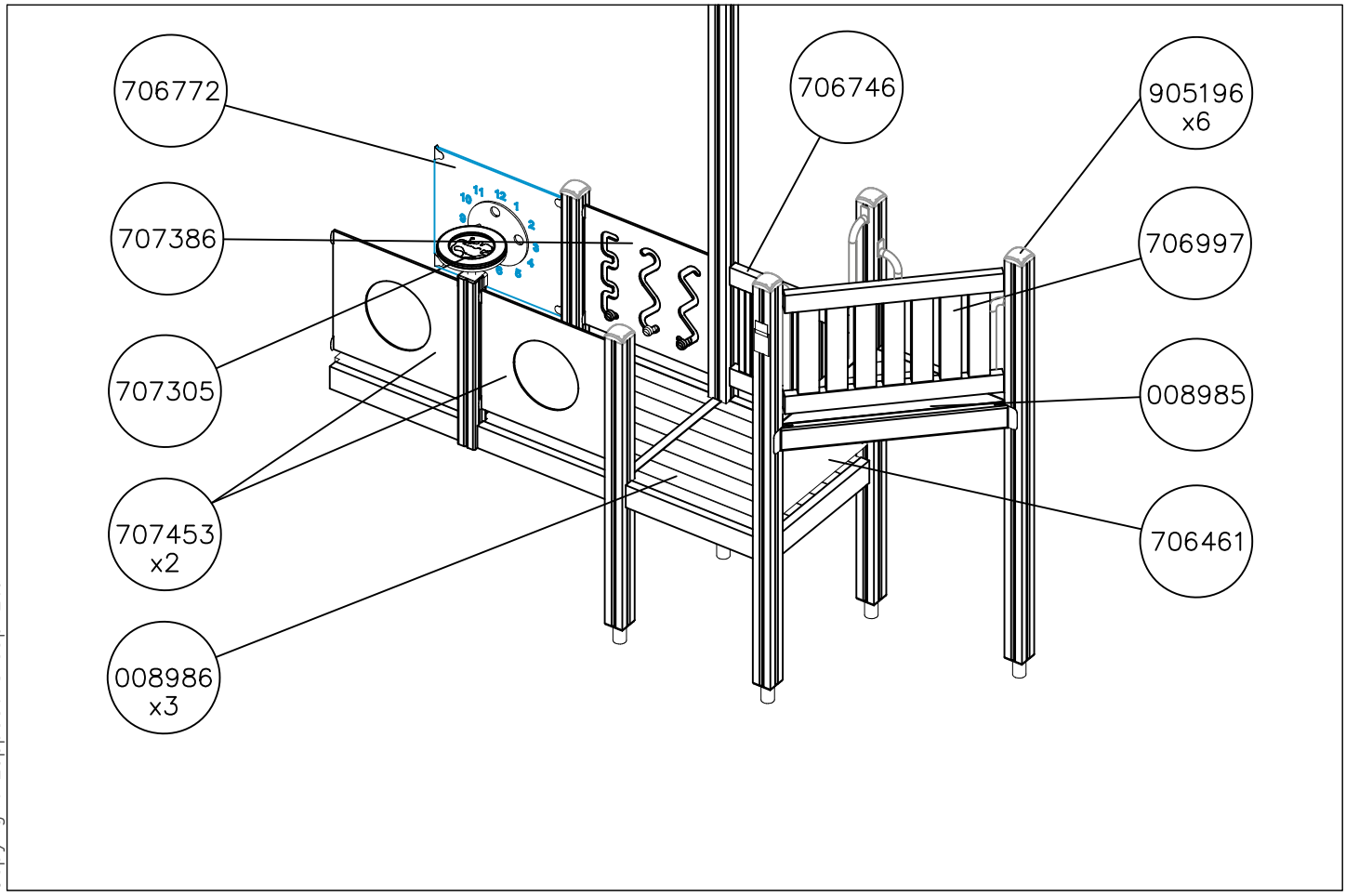

Copyright Lappset Group Ltd

LAPPSET®
FINNO

137835

TOWER C
7e

DATE: 17.3.2020

1:50

A

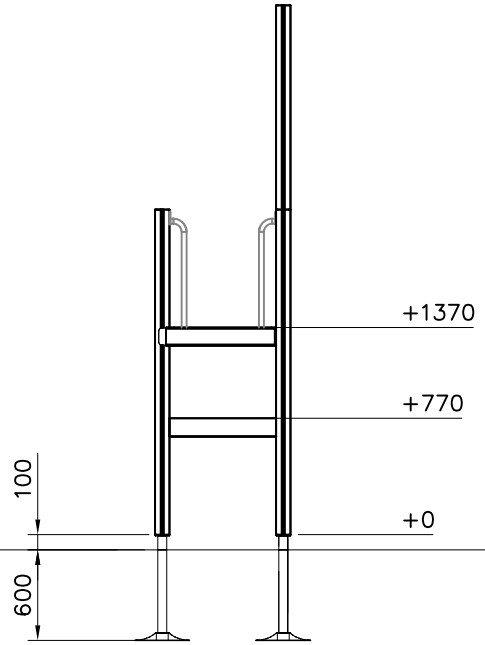

B

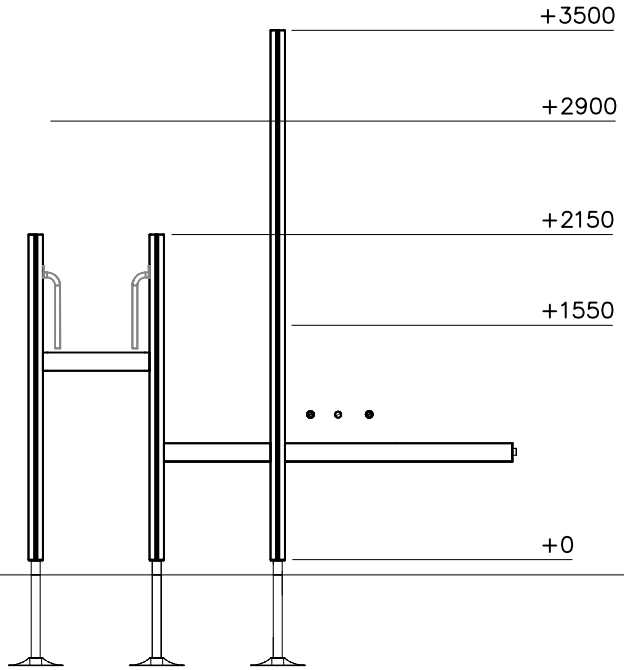

C

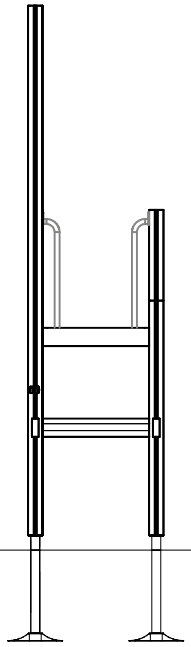

D

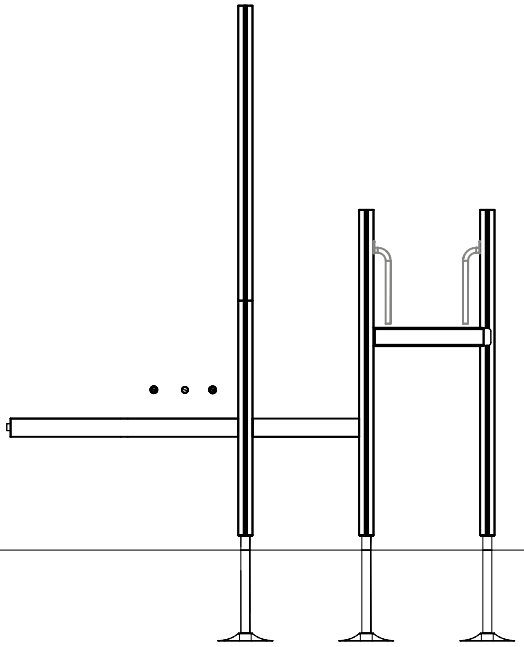

Copyright Lappset Group Ltd

LAPPSET®
FINNO

137835

TOWER D
7f

DATE: 17.3.2020

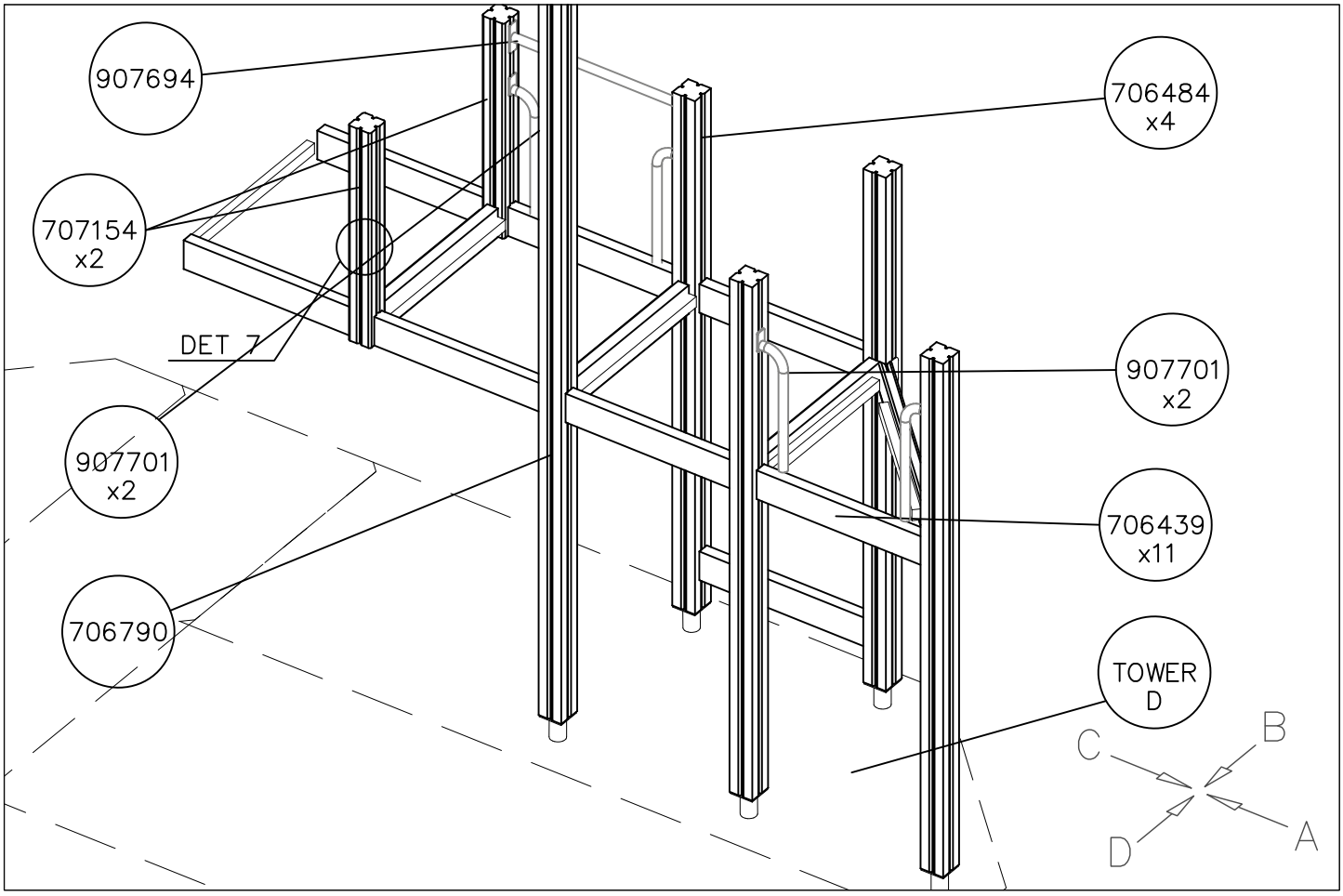

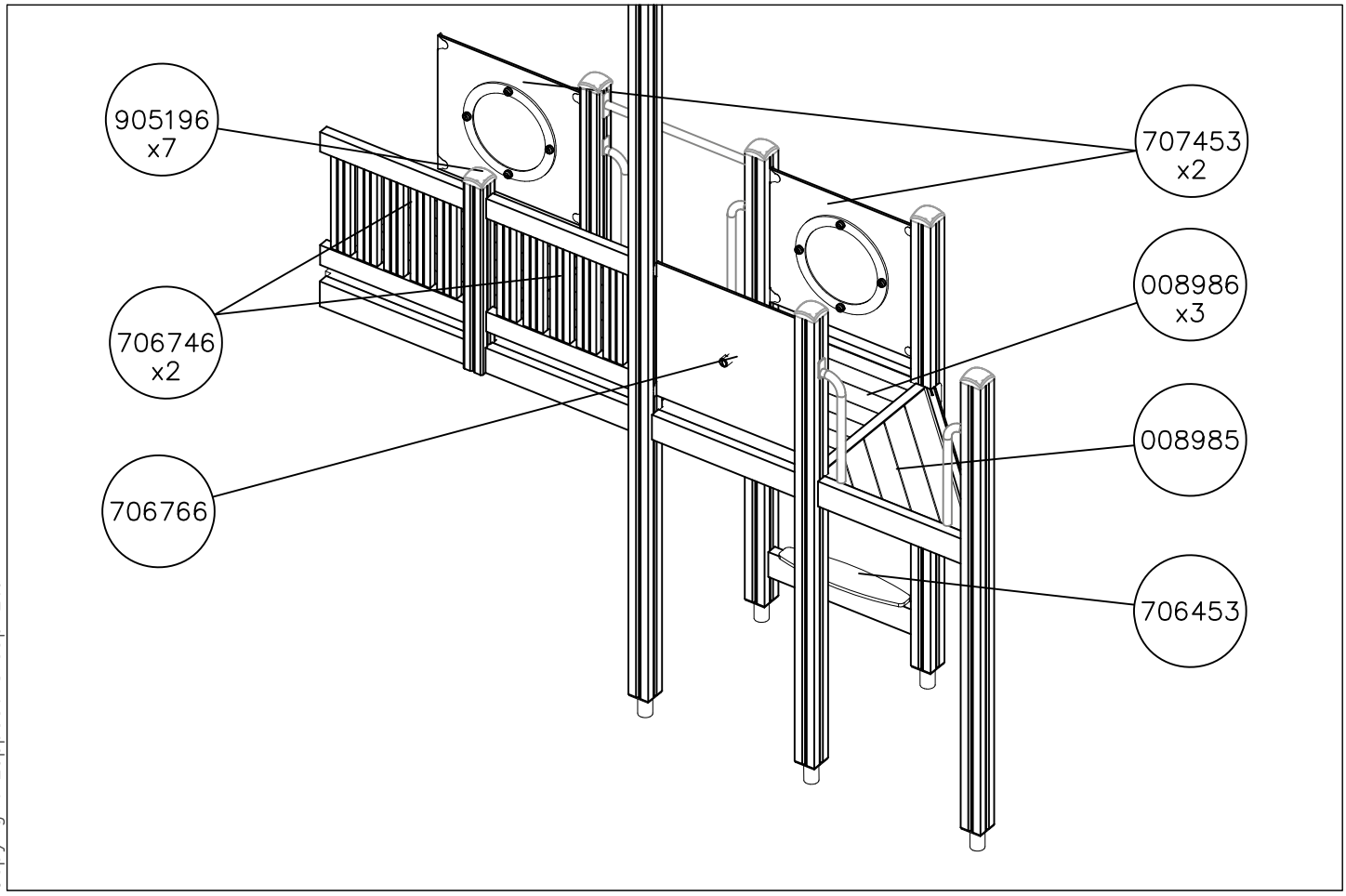

Copyright Lappset Group Ltd

LAPPSET®
FINNO

137835

TOWER D
7g

DATE: 17.3.2020

1:50

A

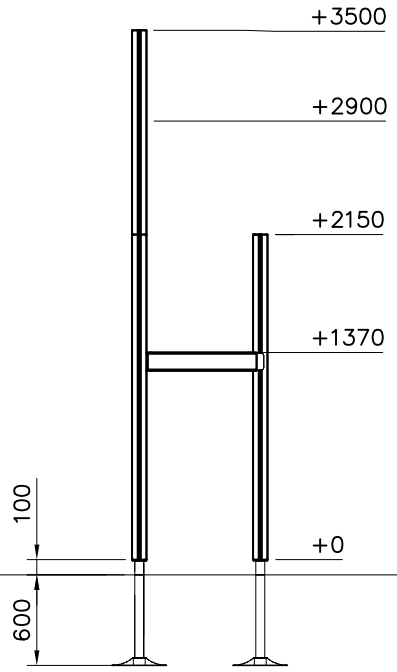

B

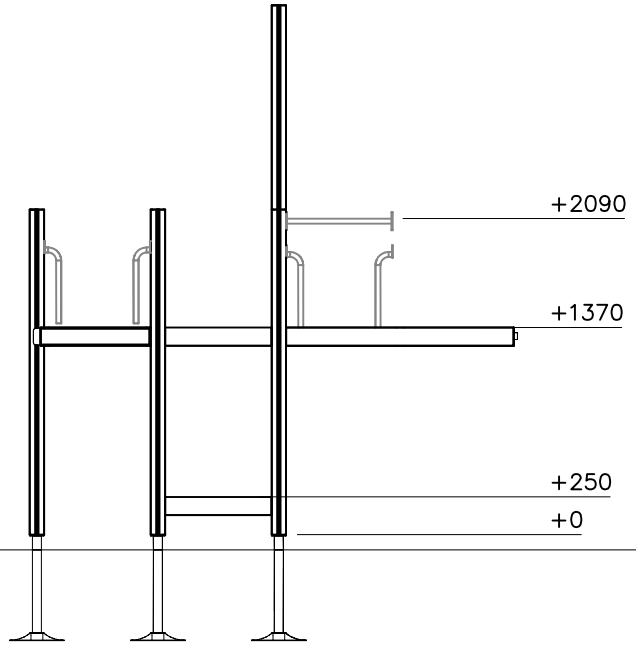

C

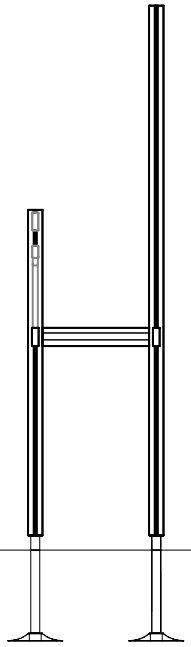

D

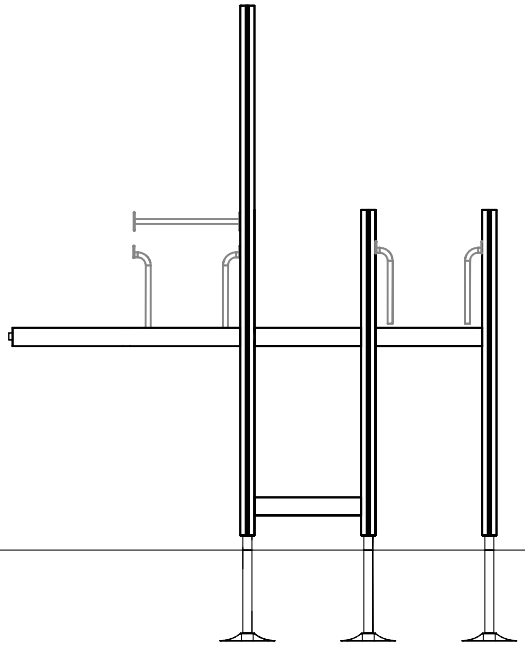

Copyright Lappset Group Ltd

LAPPSET®

FINNO

137835

DATE: 17.3.2020

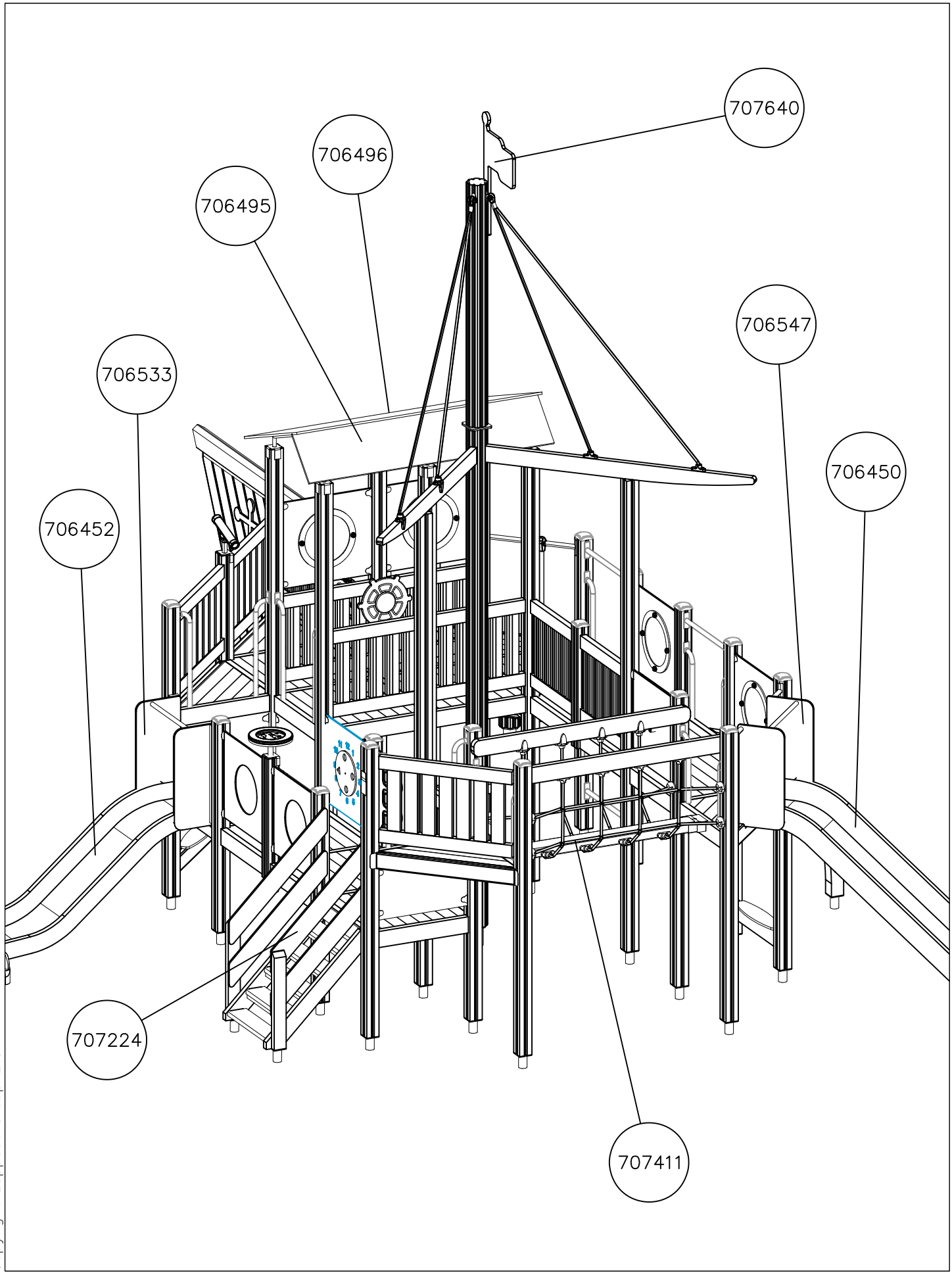

Copyright Lappset Group Ltd

LAPPSET®
FINNO

137835

DATE: 17.3.2020

8a

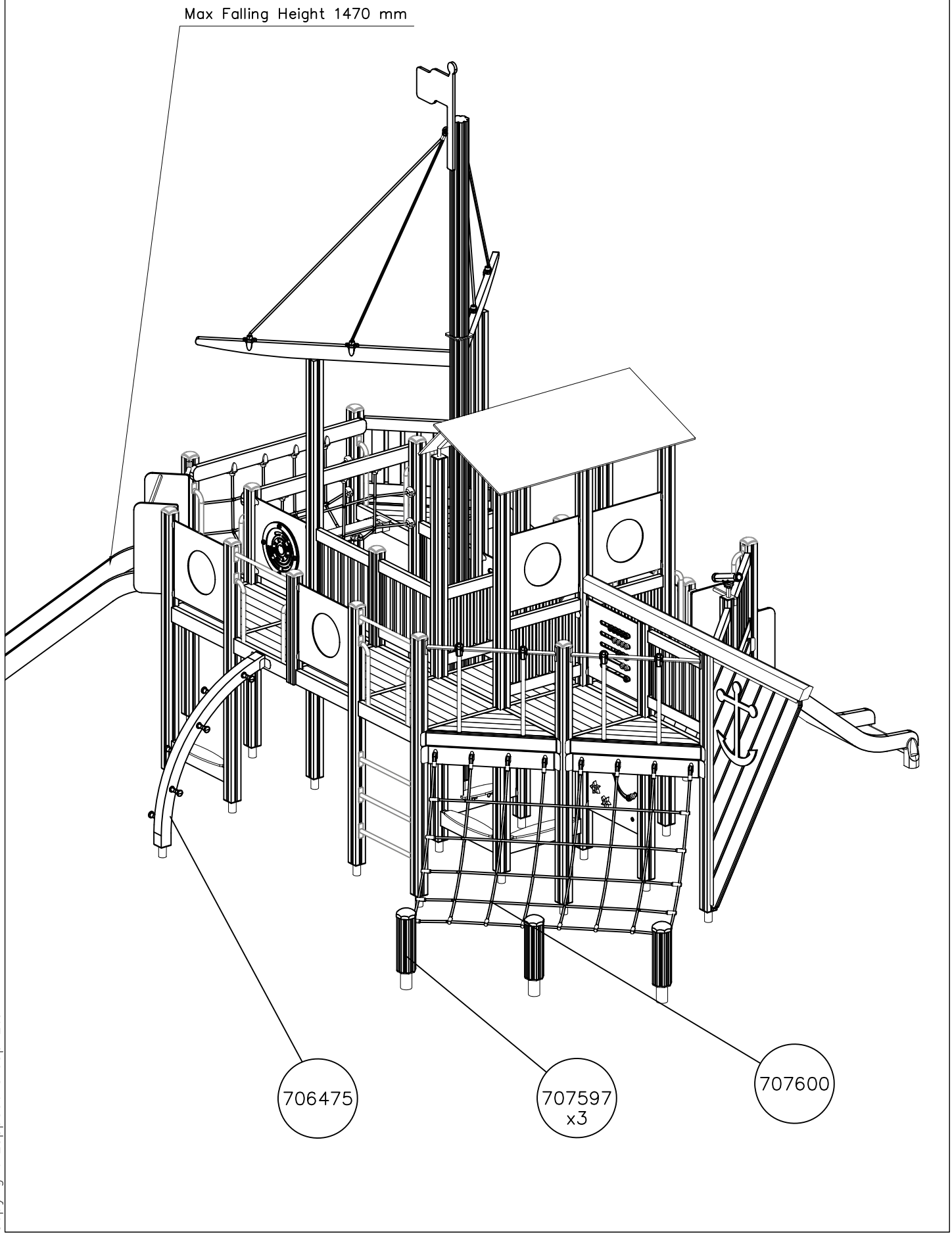

Copyright Lappset Group Ltd

LAPPSET®

PLANK BRIDGE 16

FINNO

DATE: 5.4.2016

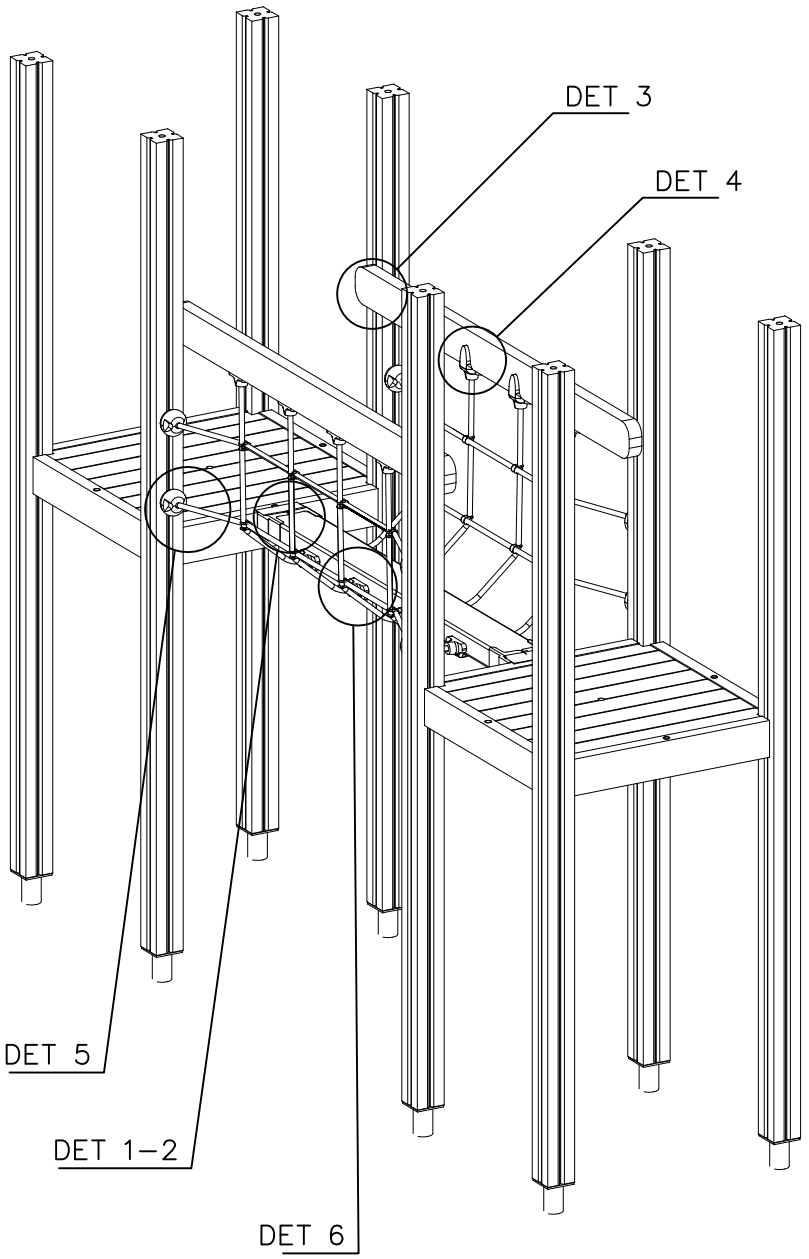

1	980123	PCS 32	2	909232	PCS 4
	Ø7x60			8x120	
3	980128	PCS 24	4	980151	PCS 4
	Ø7x40			Ø16/8.4	
5	900240	PCS 16	6	905112	PCS 8
	8x70			Ø22	
7	905083	PCS 4			PCS
	Ø32				
		PCS			PCS
		PCS			PCS
1	707401	PCS 2	2	707407	PCS 2
	45x120x1680			1540x800	
3	707410	PCS 1			PCS

LAPPSET®

PLANK BRIDGE 16

FINNO

DATE: 5.4.2016

HORIZONTAL

1: 40

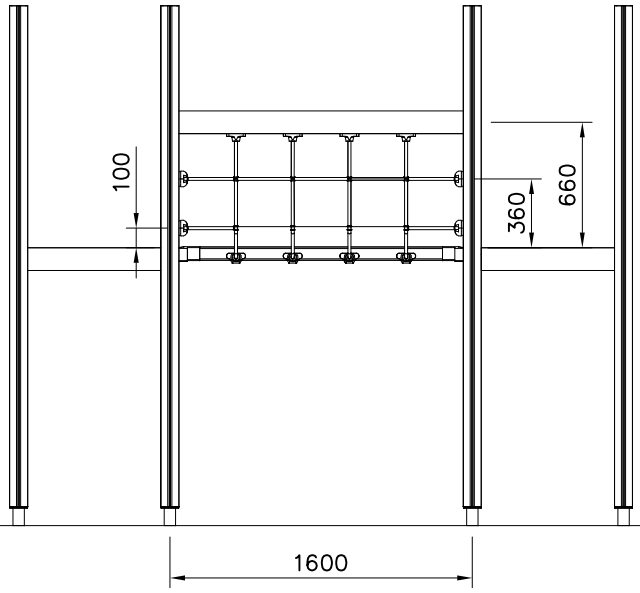

BOOM OPTIONS

707401

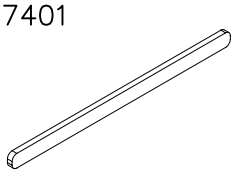

45x120x3280

-602	DARK BROWN	-608	BLUE
-603	LIGHT BROWN	-609	GREEN
-604	LIGHT GRAY	-610	YELLOW
-605	DARK GRAY	-611	LIME
-606	GRAY	-612	FUXIA
-607	RED		

NET OPTIONS

707407

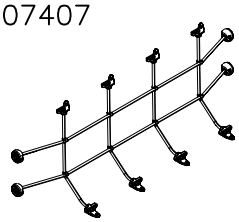

3140x800

-301	BLUE
-302	RED
-303	BEIGE
-304	GRAY
-305	BLACK
-306	YELLOW

Copyright 1998 Lappset Group Ltd

LAPPSET®

PLANK BRIDGE 16

FINNO

DATE: 5.4.2016

DET 1

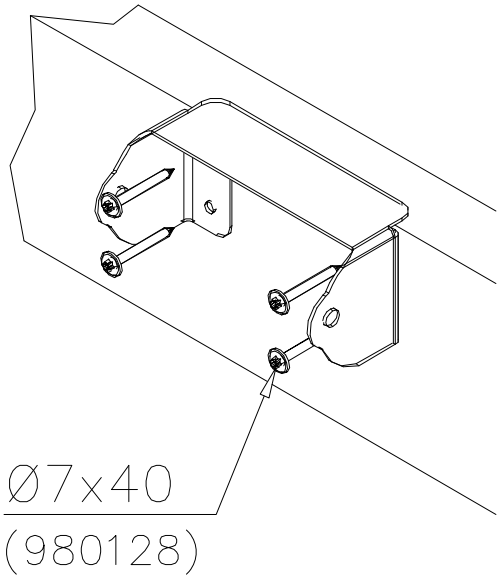

DET 2

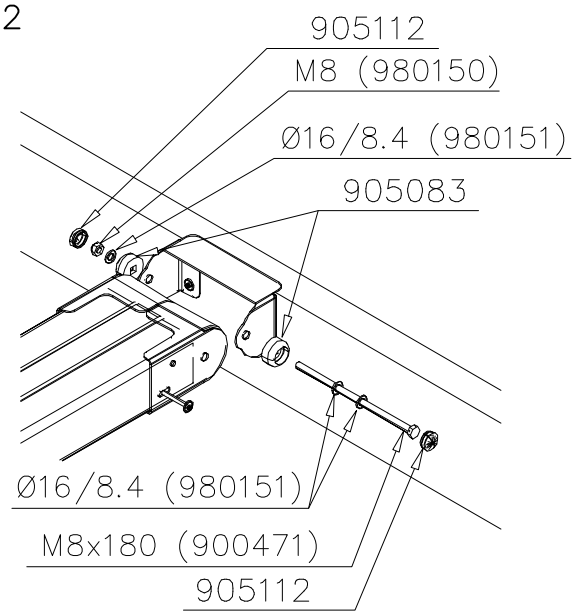

DET 3

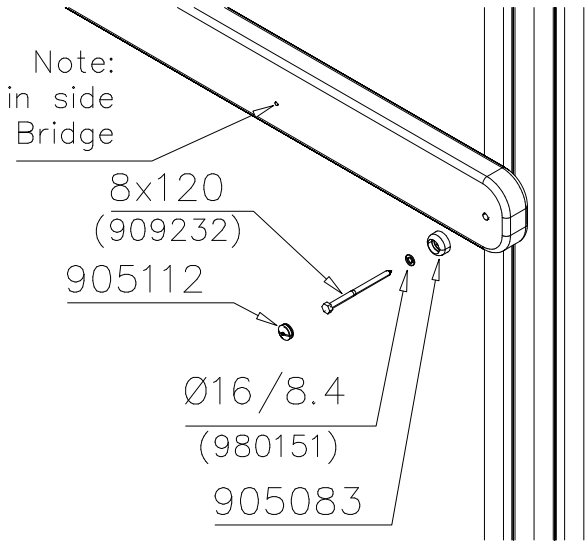

DET 4

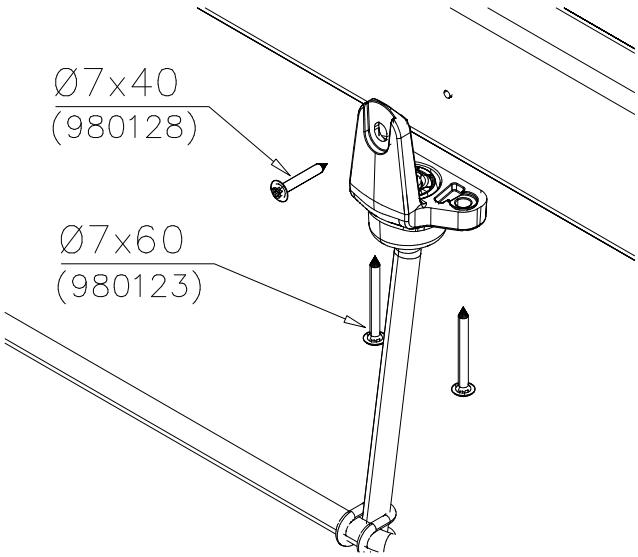

DET 5

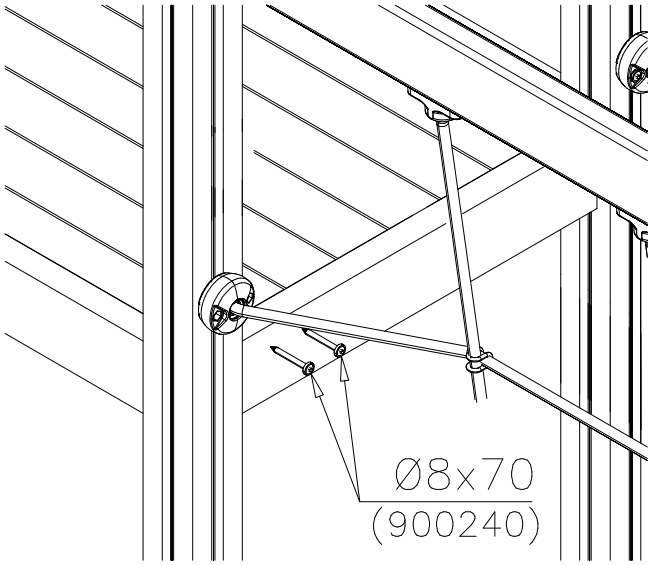

DET 6

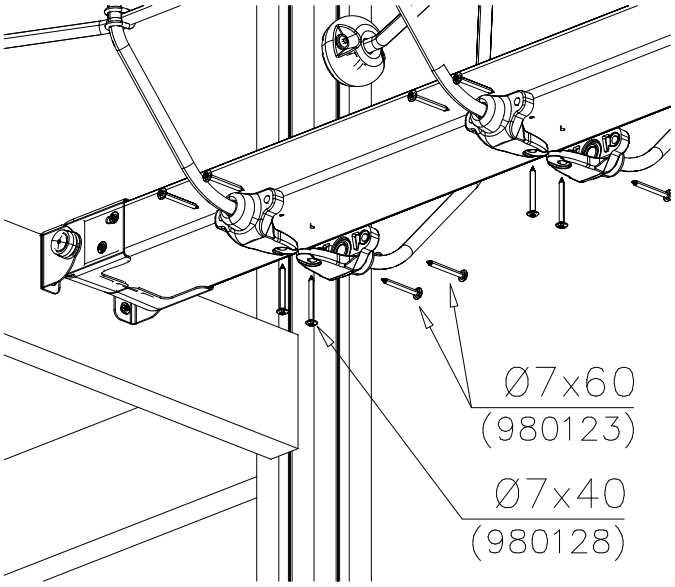

Copyright 1998 Lappset Group Ltd

LAPPSET®

FOOT

DEEP FOUNDATION

DATE: 13.3.2014

4A

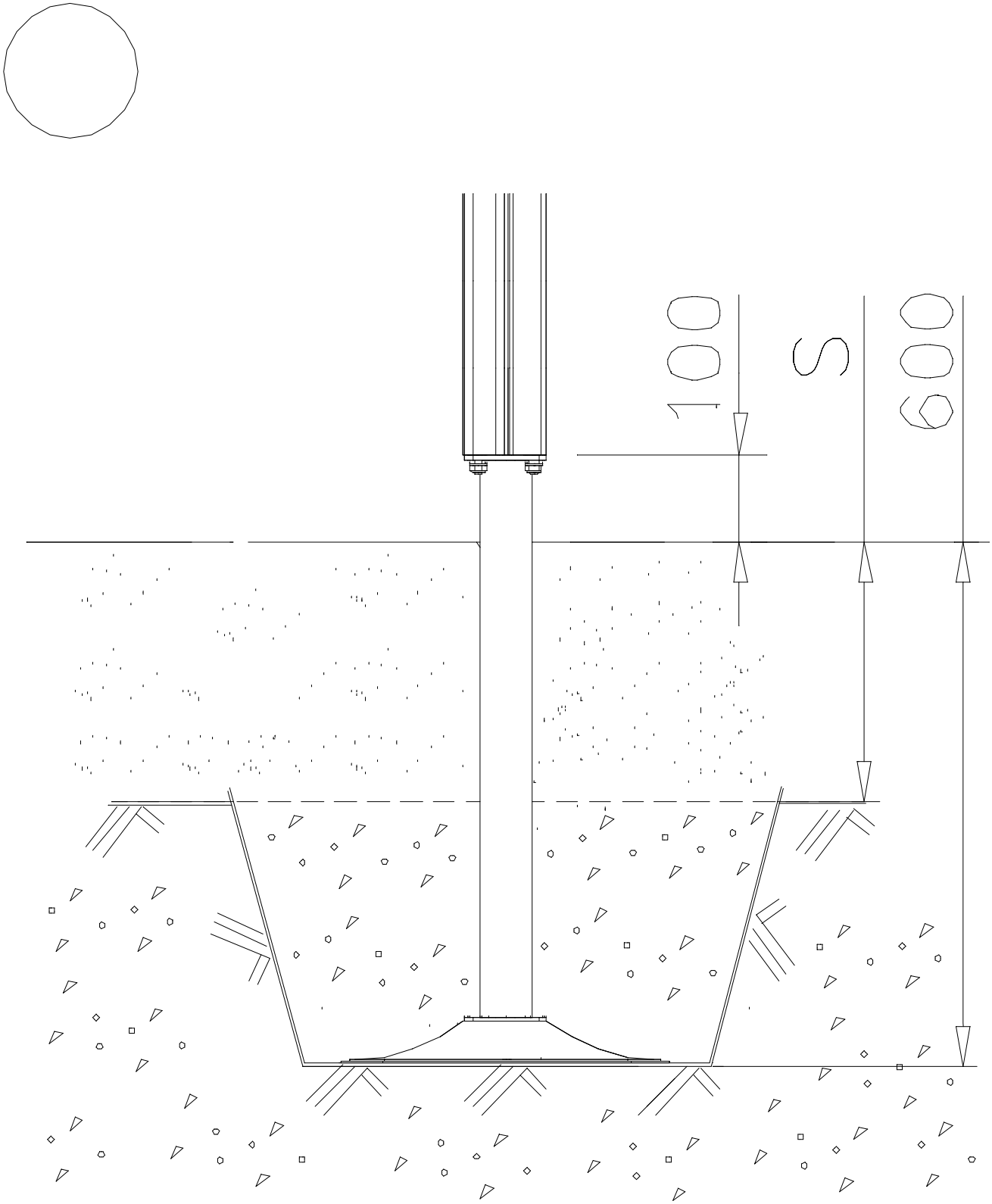

Copyright Lappset Group Ltd

LAPPSET®

FOOT

BETON FOUNDATION

DATE: 27.10.2015

1(1)

② 905104 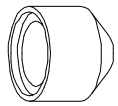 M10	PCS 4		PCS
	PCS		PCS

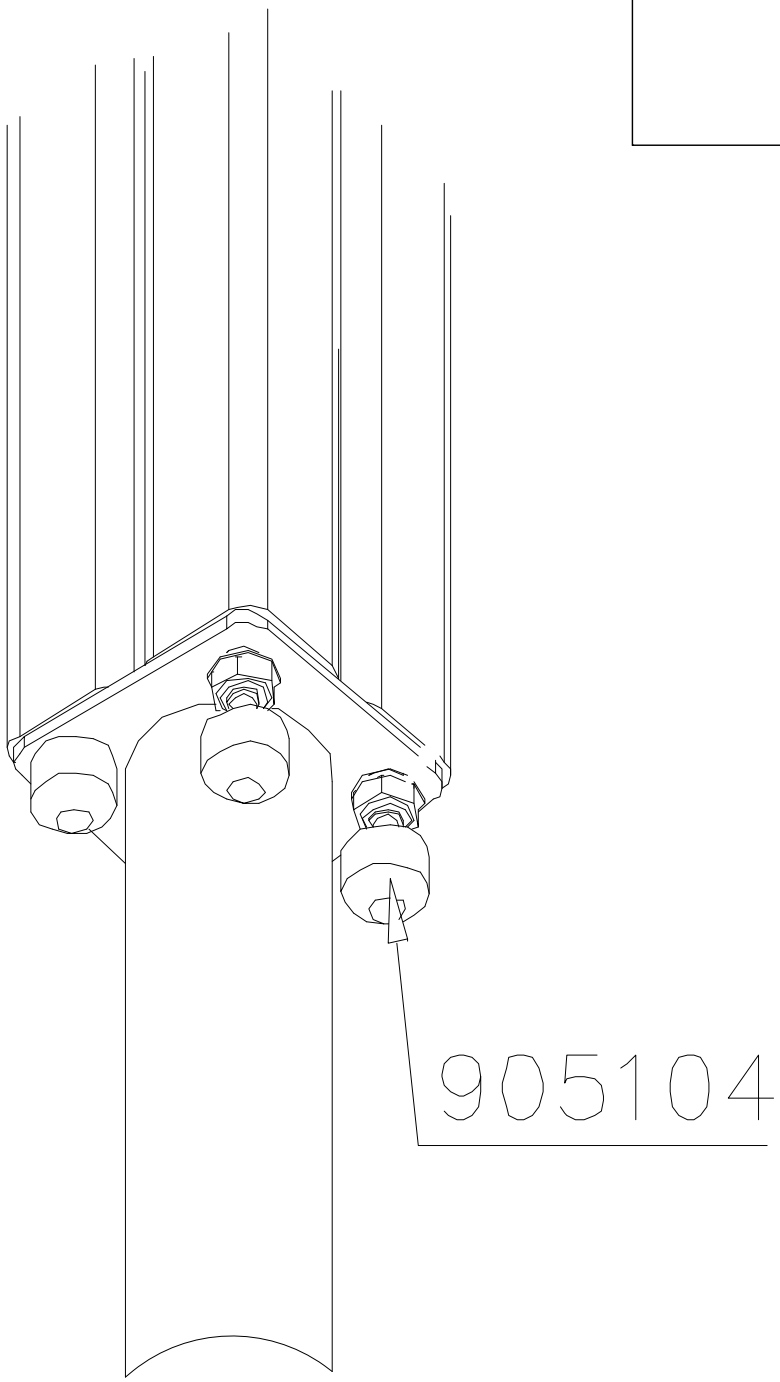

Copyright Lappset Group Ltd

LAPPSET®

FOOT

DEEP FOUNDATION

DATE: 15.5.2018

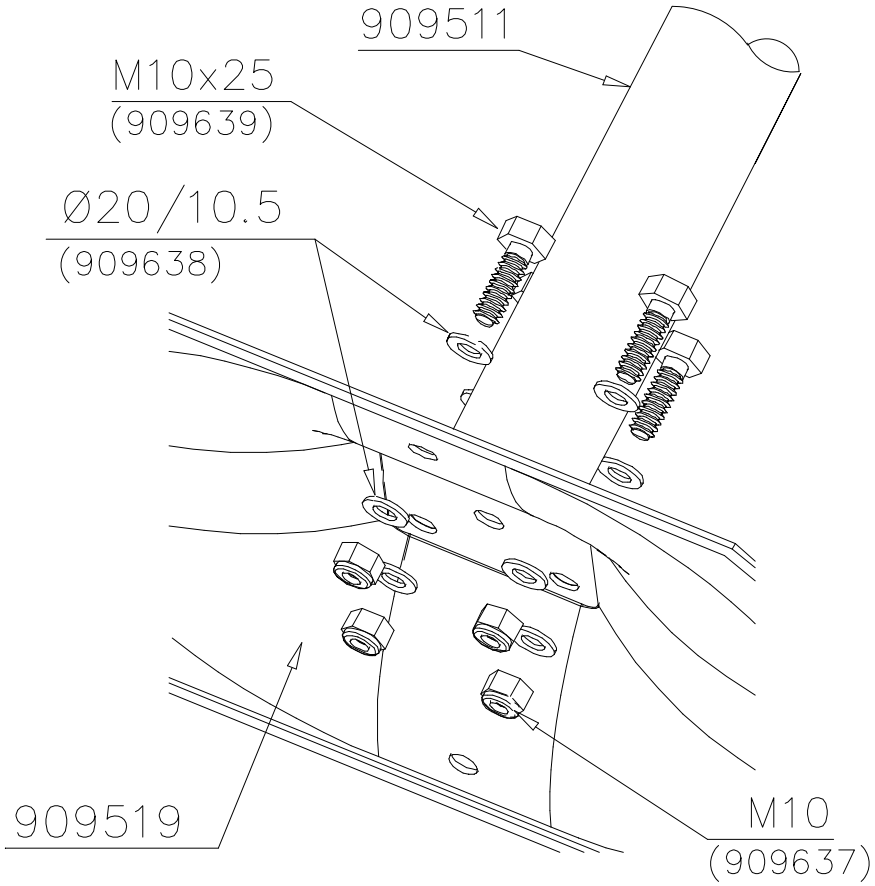

		PCS			PCS
1	909511	1	2	909519	1
	90x90x650			50x380x380	
3	909637	4	4	909638	8
	M10			Ø20/10.5	
5	909639	4	6	905104	4
	M10x25			M10	

Copyright Lappset Group Ltd

LAPPSET SLIDE WOOD

DEEP FOUNDATION

DATE: 22.5.2015

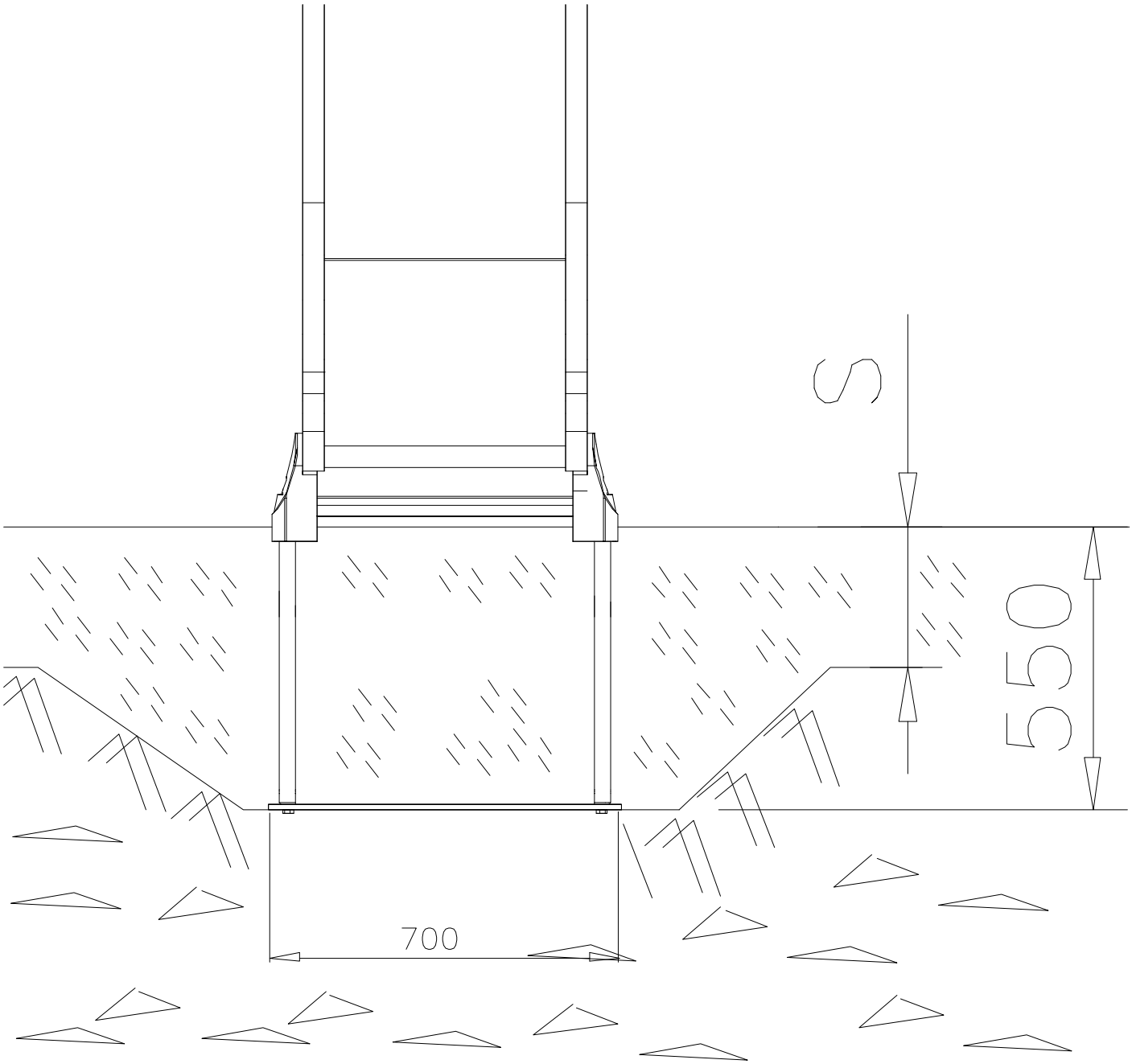

Copyright 1998 Lappset Group Ltd

LAPPSET®

SLIDE WOOD

DEEP FOUNDATION

DATE: 3.11.2017

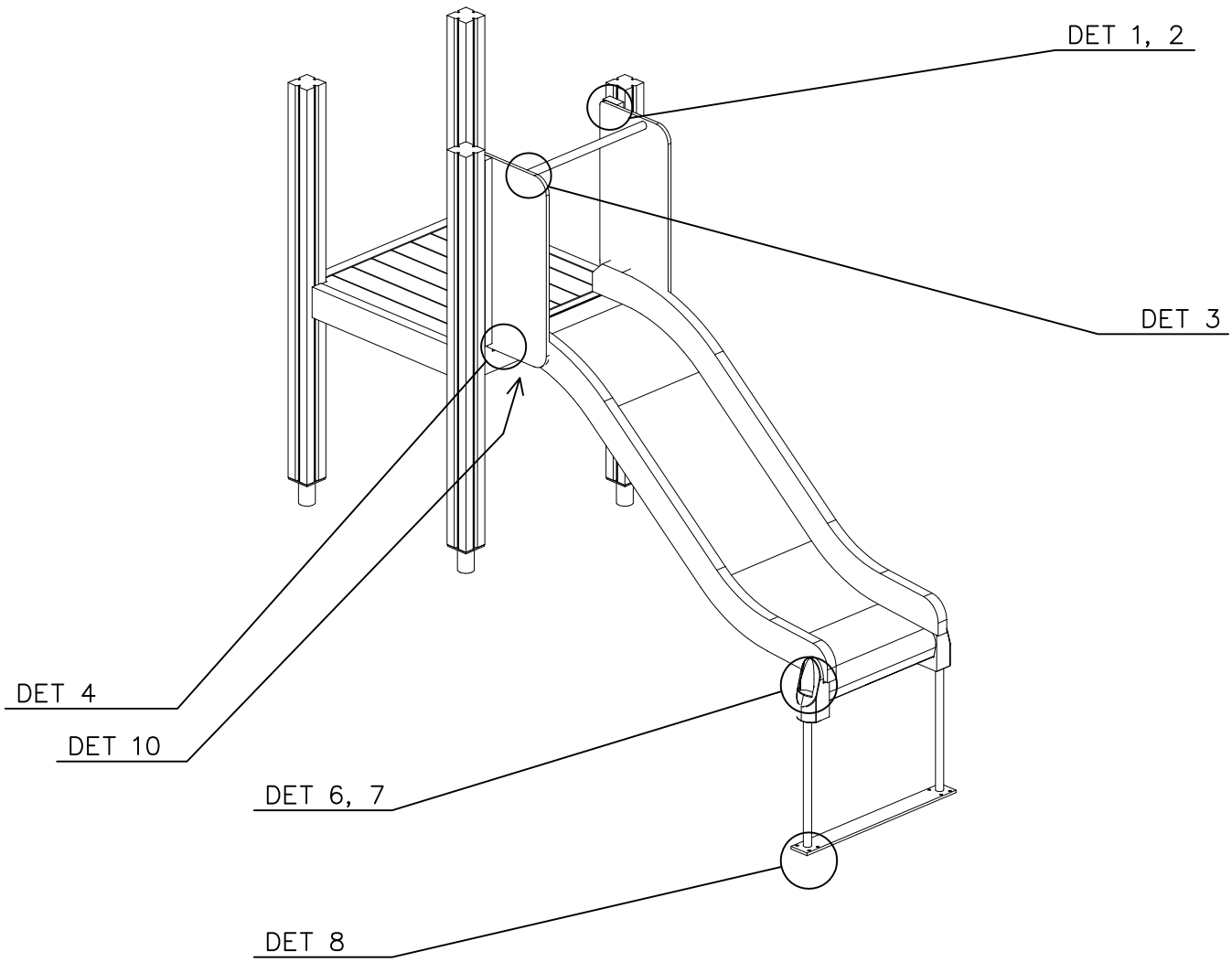

SLIDE OPTIONS

706450 +1470 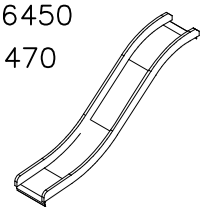	706450–602 DARK BROWN 706450–603 LIGHT BROWN 706450–604 LIGHT GRAY	
706452 +870 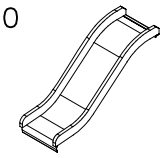	706452–602 DARK BROWN 706452–603 LIGHT BROWN 706452–604 LIGHT GRAY	

WALL OPTIONS

706371 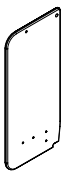	706371–701 BLUE 706371–702 YELLOW 706371–703 LIME 706371–704 DRARK GRAY 706371–705 LIGHT GRAY 706371–706 RED	706371–707 GREEN 706371–708 FUXIA

Copyright Lappset Group Ltd

LAPPSET SLIDE WOOD

80M DATE: 3.11.2017

	PCS		PCS		PCS		PCS		PCS		PCS
SLIDE	1	SLIDE	1	706371	2	706505	2	901868	1	(1) 903093	2
+1470		+870		15x345x750		35x70x730		Ø34x598		Ø8x90	
(2) 909876	2	(3) 980100	12	(4) 980128	11	(5) 999561	1				
M8x40		Ø5x60		Ø7x40		10g					

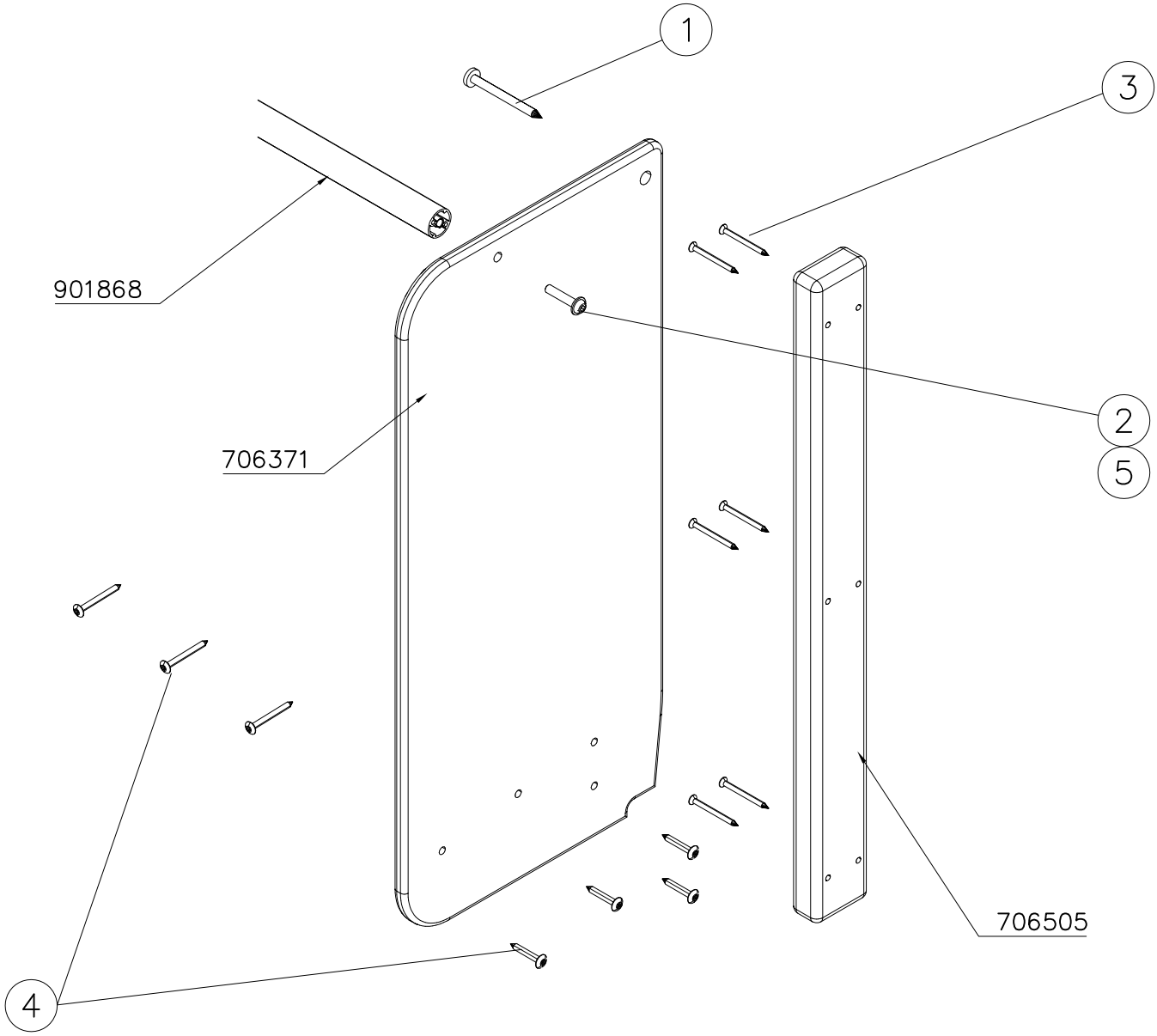

Copyright 1998 Lappset Group Ltd

LAPPSET®

SLIDE WOOD

80M

DATE: 3.11.2017

DET 1

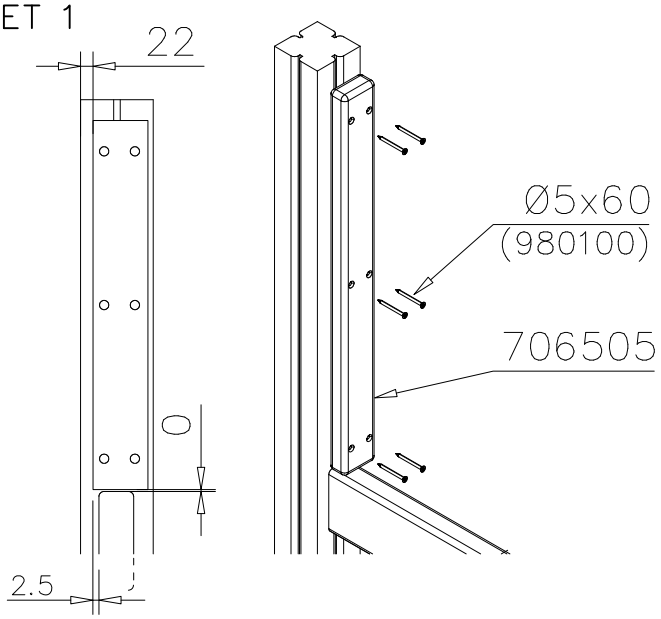

DET 2

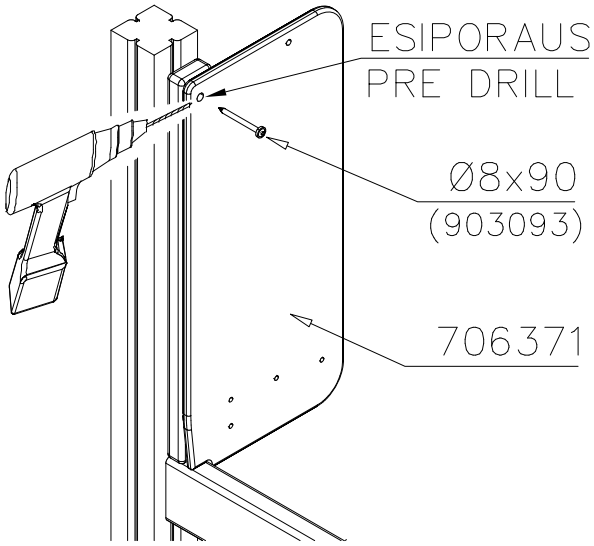

DET 3

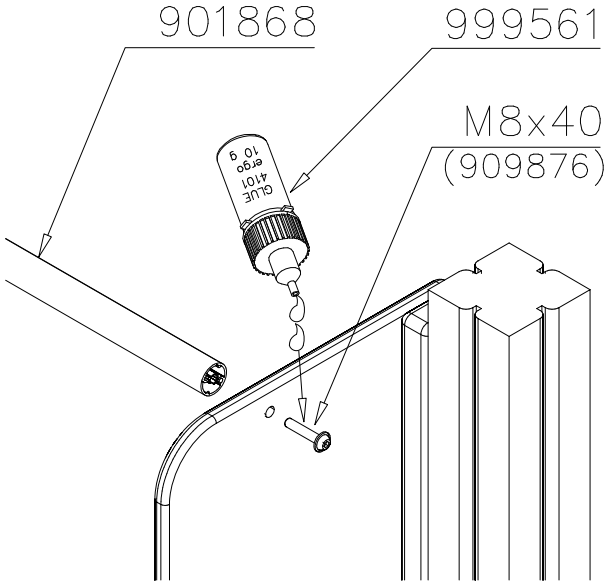

DET 4

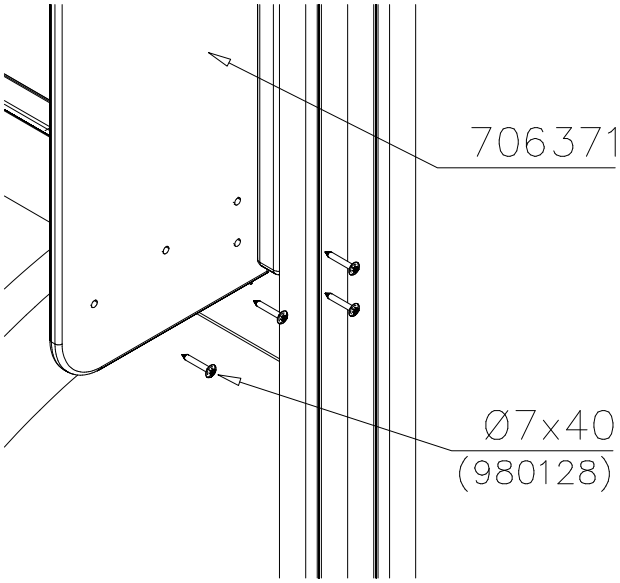

DET 5

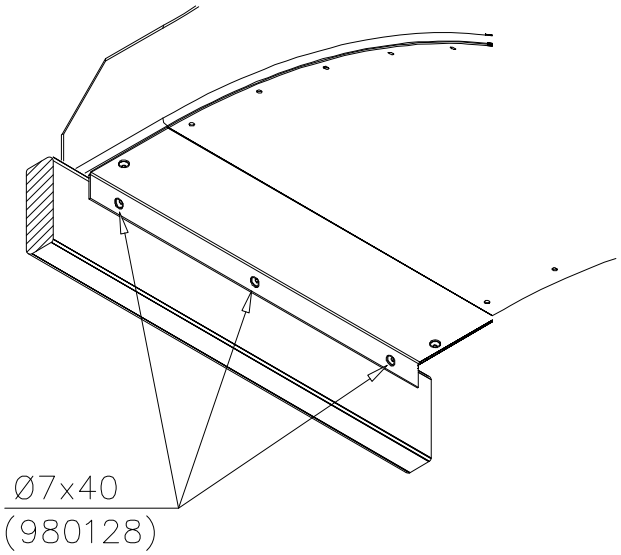

Copyright 1998 Lappset Group Ltd

LAPPSET SLIDE WOOD

DEEP FOUNDATION

DATE: 3.11.2017

	PCS		PCS		PCS		PCS		PCS		PCS
707133	1	901868	2	901879	2	6 909210	4	7 905051	4	8 980128	6
10x80x745		Ø30x598				M8x40		Ø24/8.4		Ø7x40	

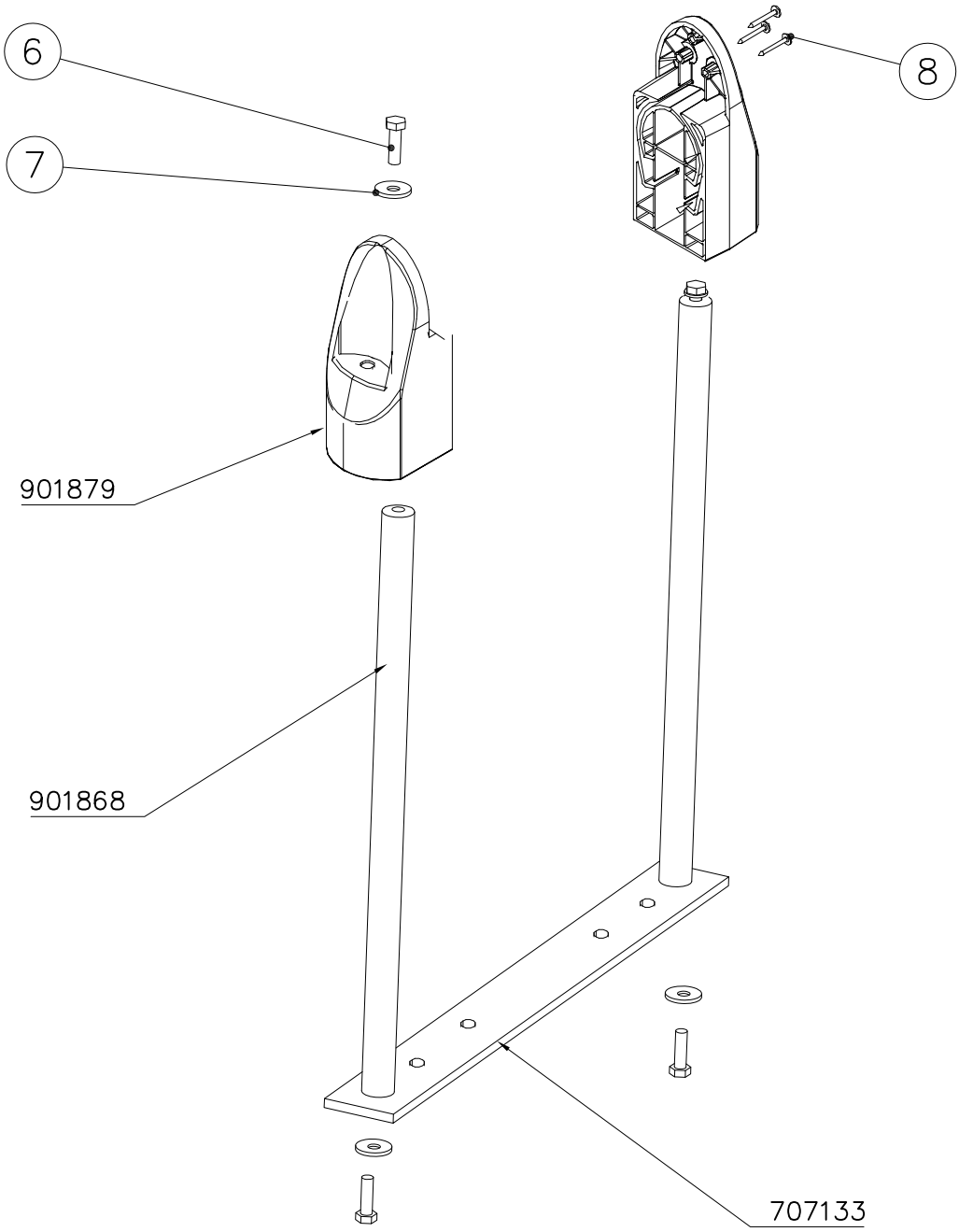

Copyright 1998 Lappset Group Ltd

LAPPSET SLIDE WOOD

DEEP FOUNDATION

DATE: 3.11.2017

DET 6

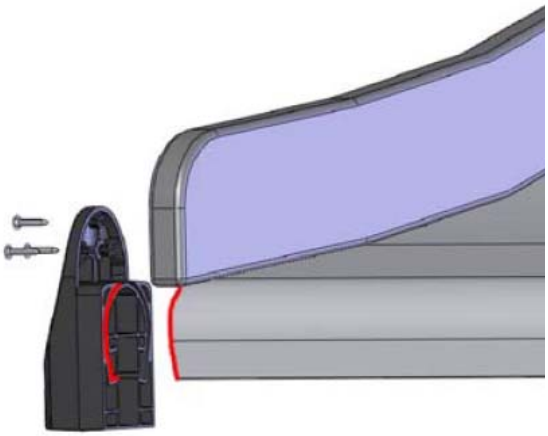

Insert sheet metal IN to the plastic cover.

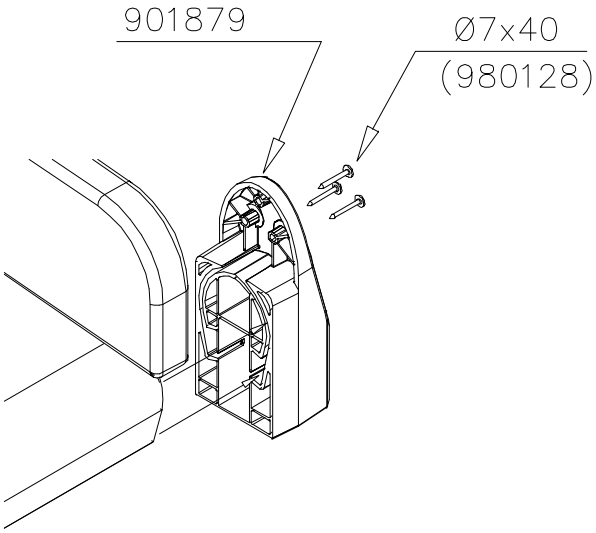

DET 7

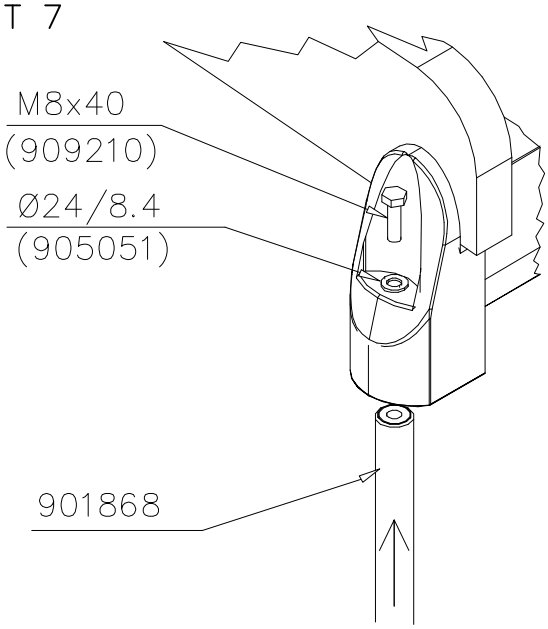

DET 8

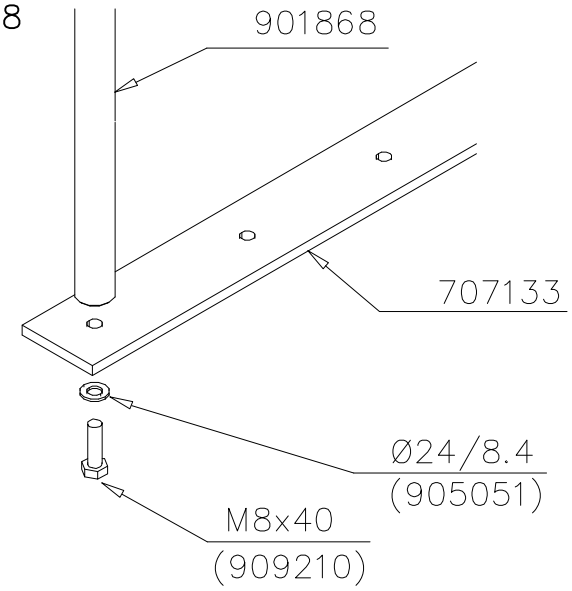

Copyright 1998 Lappset Group Ltd

LAPPSET®

WALLS 4 points

HPL

DATE: 29.3.2016

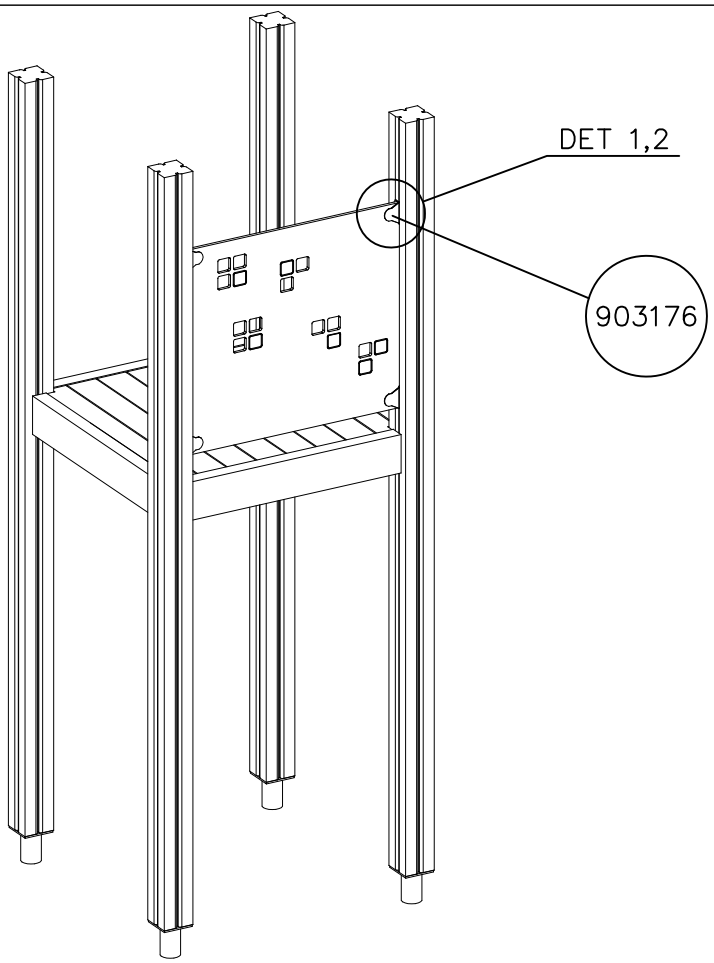

		PCS
1	903176	4
2	909850 M8x25	4
3	909256 Ø16/8.4x1.6	8
4	909633 M8	4
5	980123 Ø7x60	4

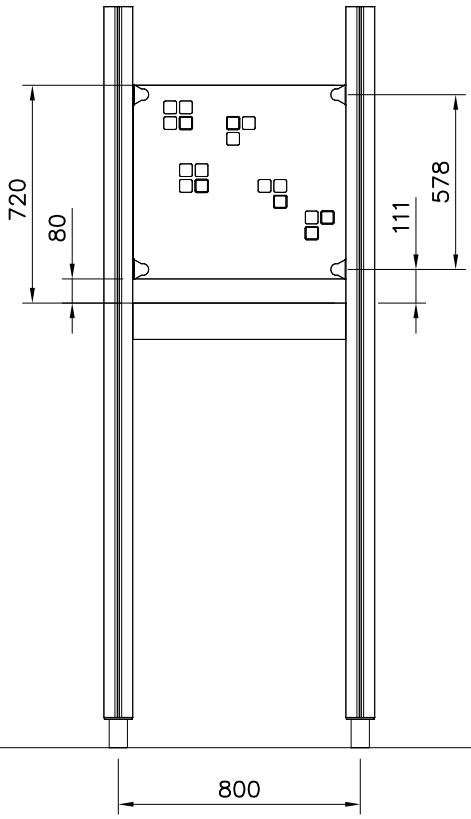

Copyright Lappset Group Ltd

LAPPSET®

WALLS 4 points

HPL

DATE: 29.3.2016

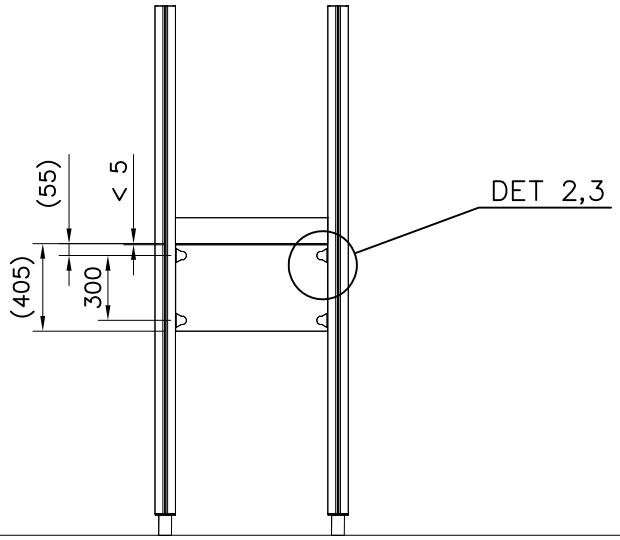

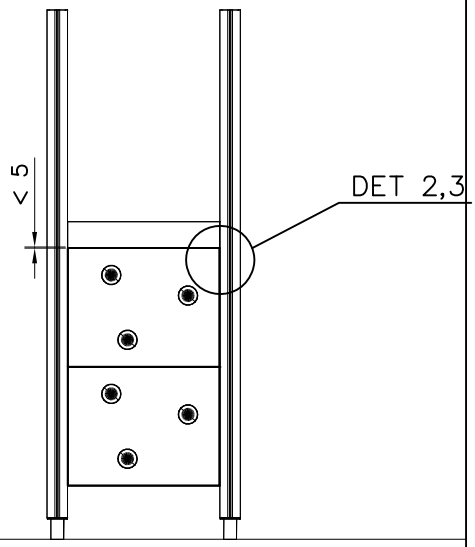

DET 1

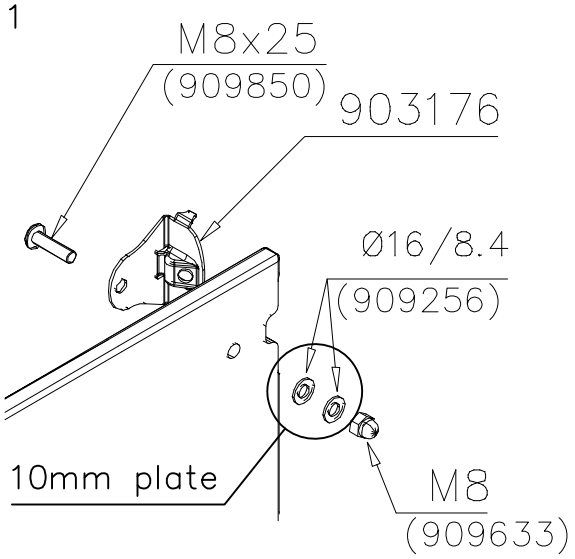

DET 2

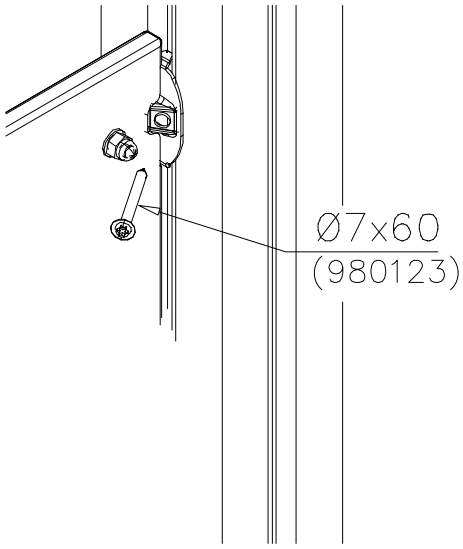

DET 3

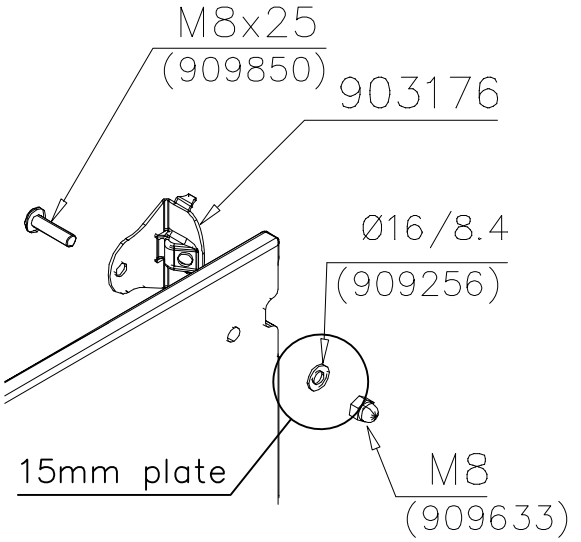

Copyright 1998 Lappset Group Ltd

LAPPSET®

FLOOR

FINNO

DATE: 28.11.2014

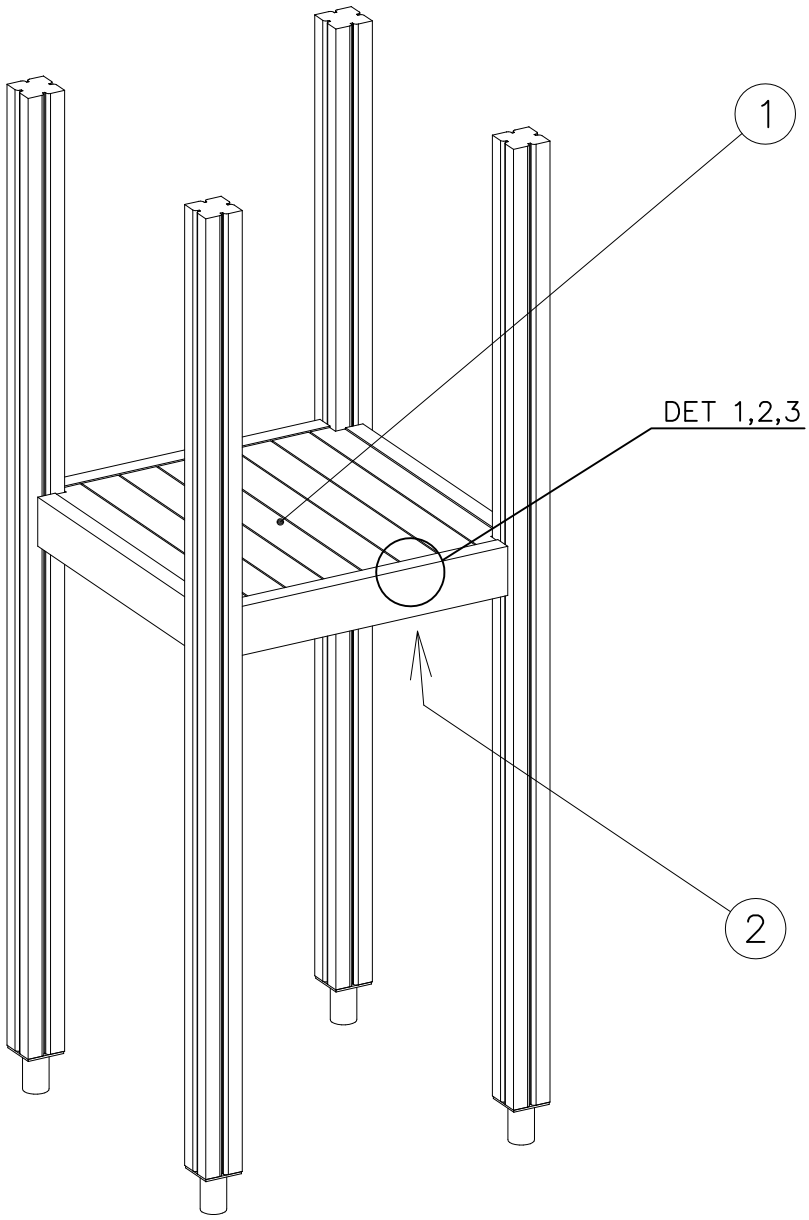

	PCS		PCS
1 008986 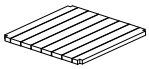 750x750	1	2 706443 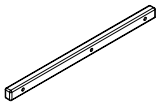 32x45x702	2
3 900240 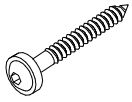 Ø8x70	6	4 980101 Ø4.5x70	8
	PCS		PCS
	PCS		PCS
	PCS		PCS

DET 1

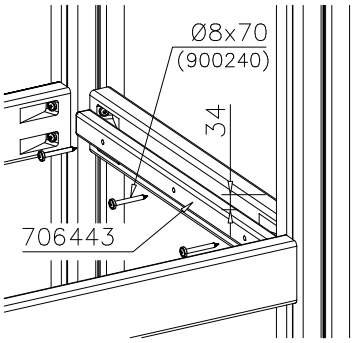

DET 2

Naulanauha kannatinlistan puolelle.
Nail list to the bottom.

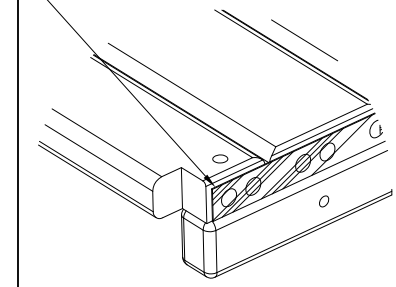

DET 3

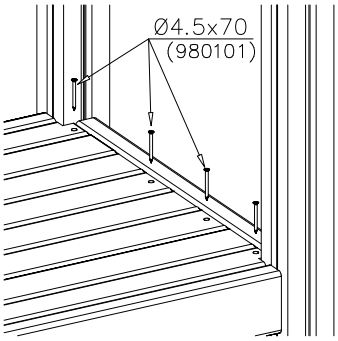

Copyright Lappset Group Ltd

LAPPSET®

DIAG. FLOOR

FINNO

DATE: 28.3.2014

		PCS
1	008985	1
	32x714x714	
2	706508	3
	32x45x650	
3	900240	9
	Ø8x70	
4	980101	6
	Ø4.5x70	

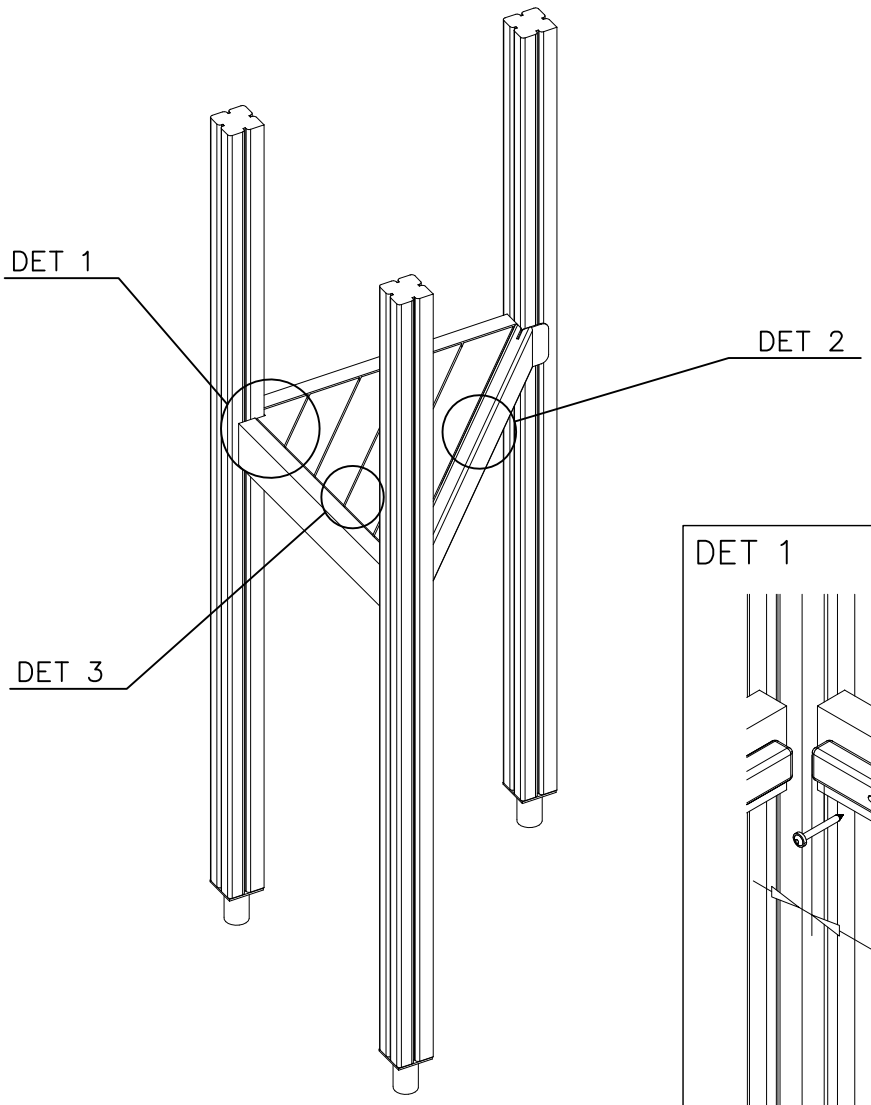

DET 1

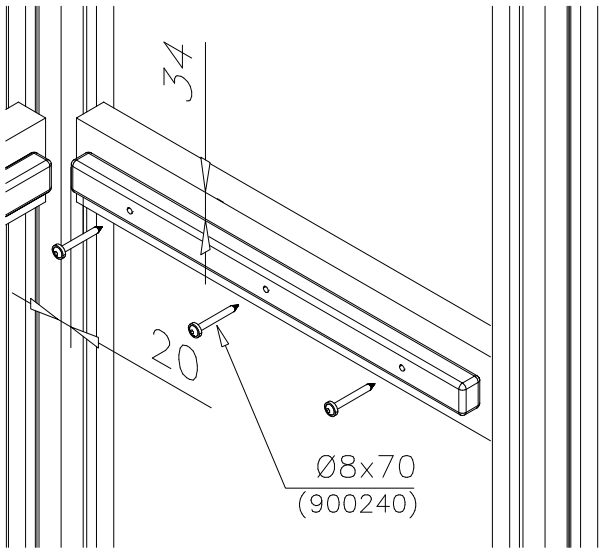

DET 2

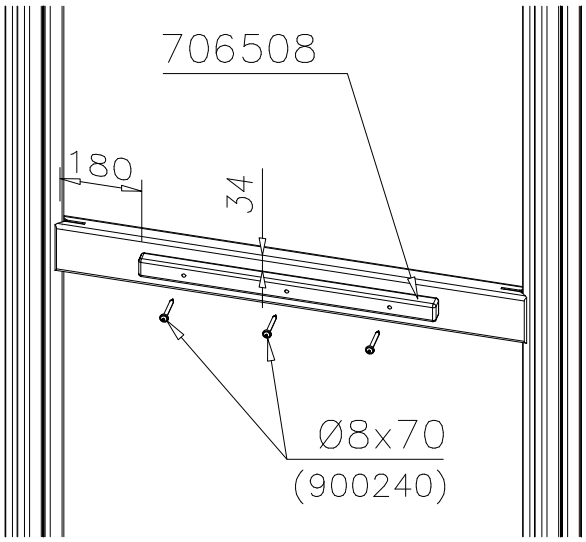

DET 3

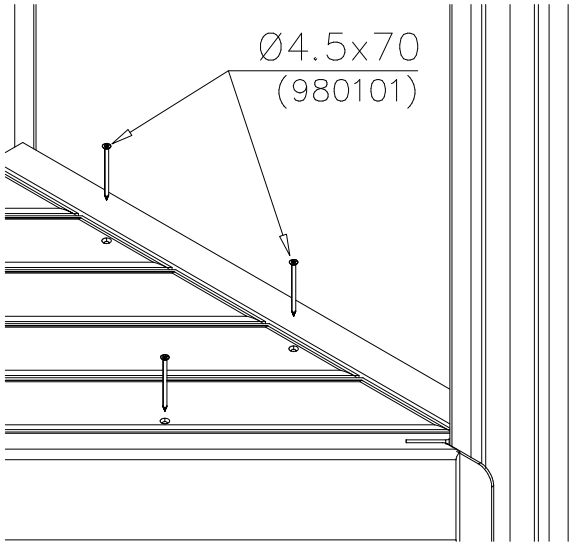

Copyright Lappset Group Ltd

LAPPSET®

BOOM

FINNO

DATE: 21.3.2014

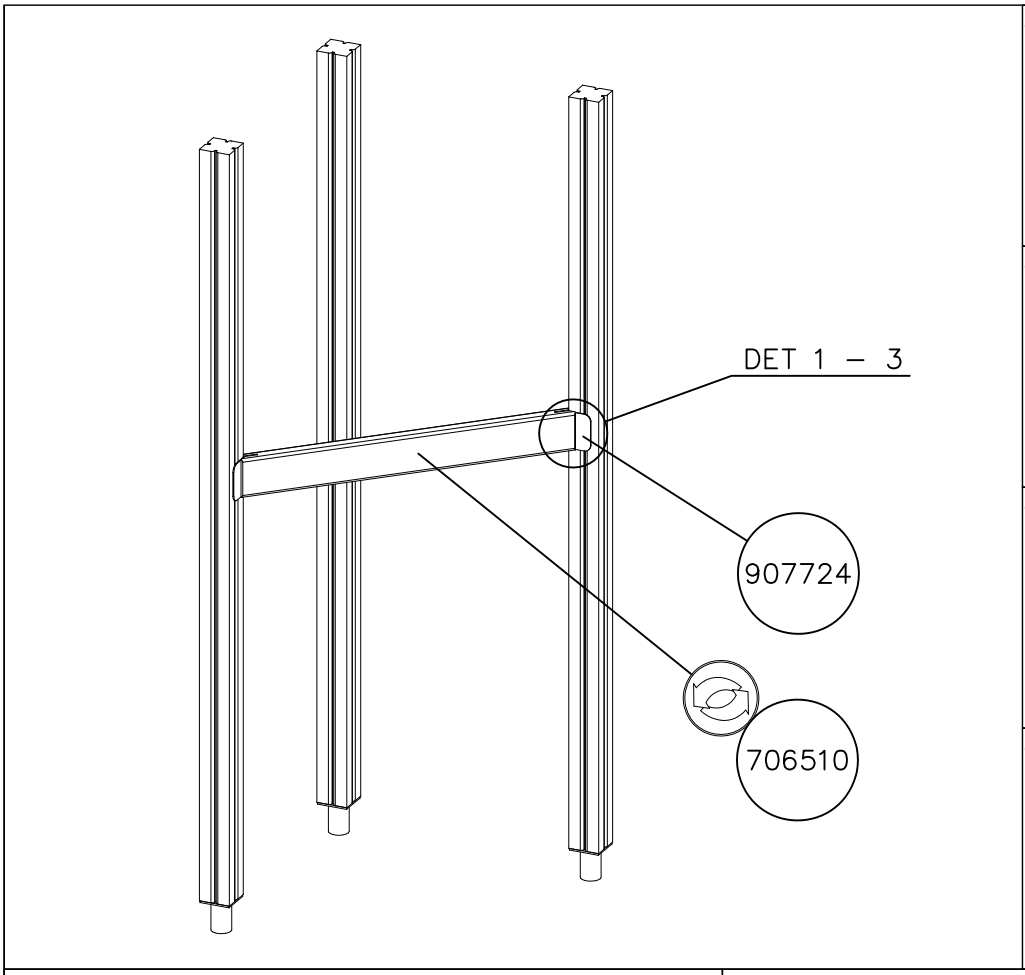

		PCS			PCS
1 706510	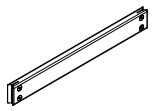 45x120x1030	1	2 907724	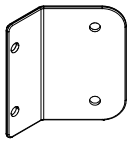	2
3 905083	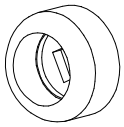 Ø32	4	4 909866	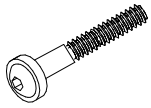 M8x60	4
5 980151	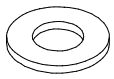 Ø16/8.4	4	6 980150	M8	4
7 905112	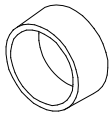 Ø22	4	8 900240	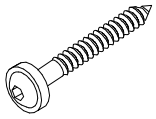 Ø8x70	4

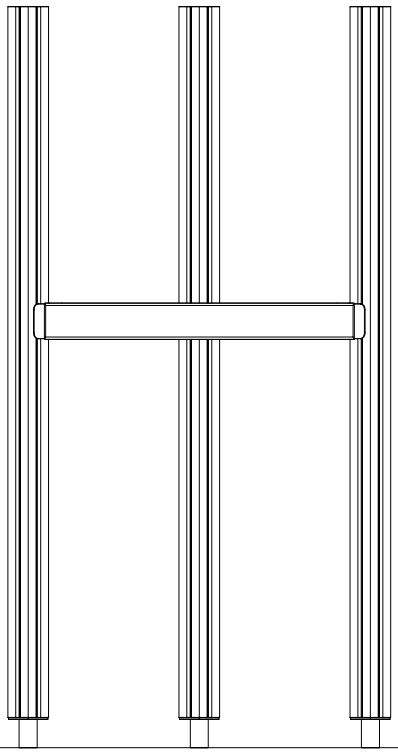

1131

BOOM OPTIONS

706510 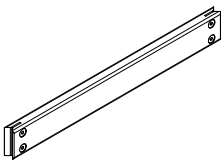 45x120x1030	706510–602	DARK BROWN
	706510–603	LIGHT BROWN
	706510–604	LIGHT GRAY

Copyright Lappset Group Ltd

LAPPSET®

BOOM

FINNO

DATE: 21.3.2014

DET 1

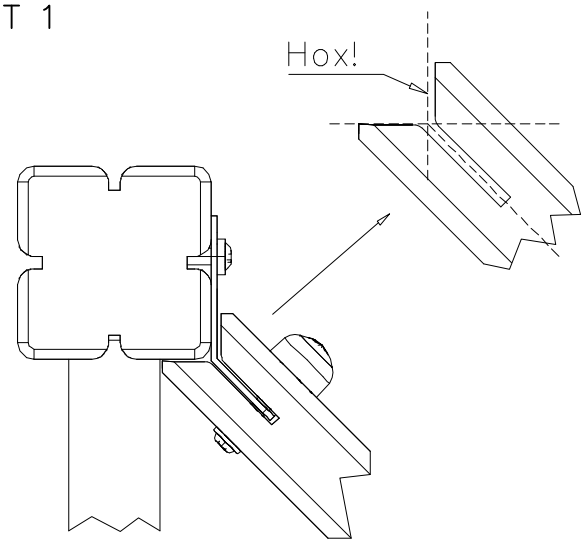

DET 2

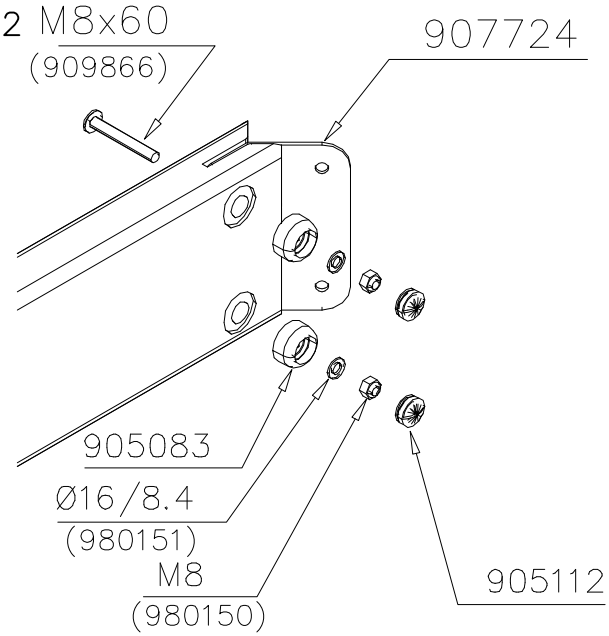

DET 3

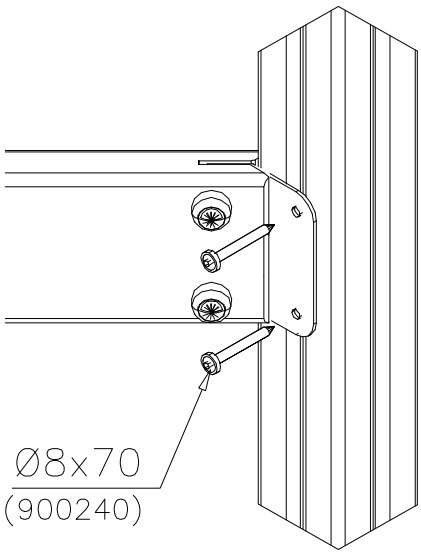

Copyright 1998 Lappset Group Ltd

LAPPSET®
DEEP FOUNDATION

DIAGONAL SLIDE WOOD

DATE: 21.9.2016

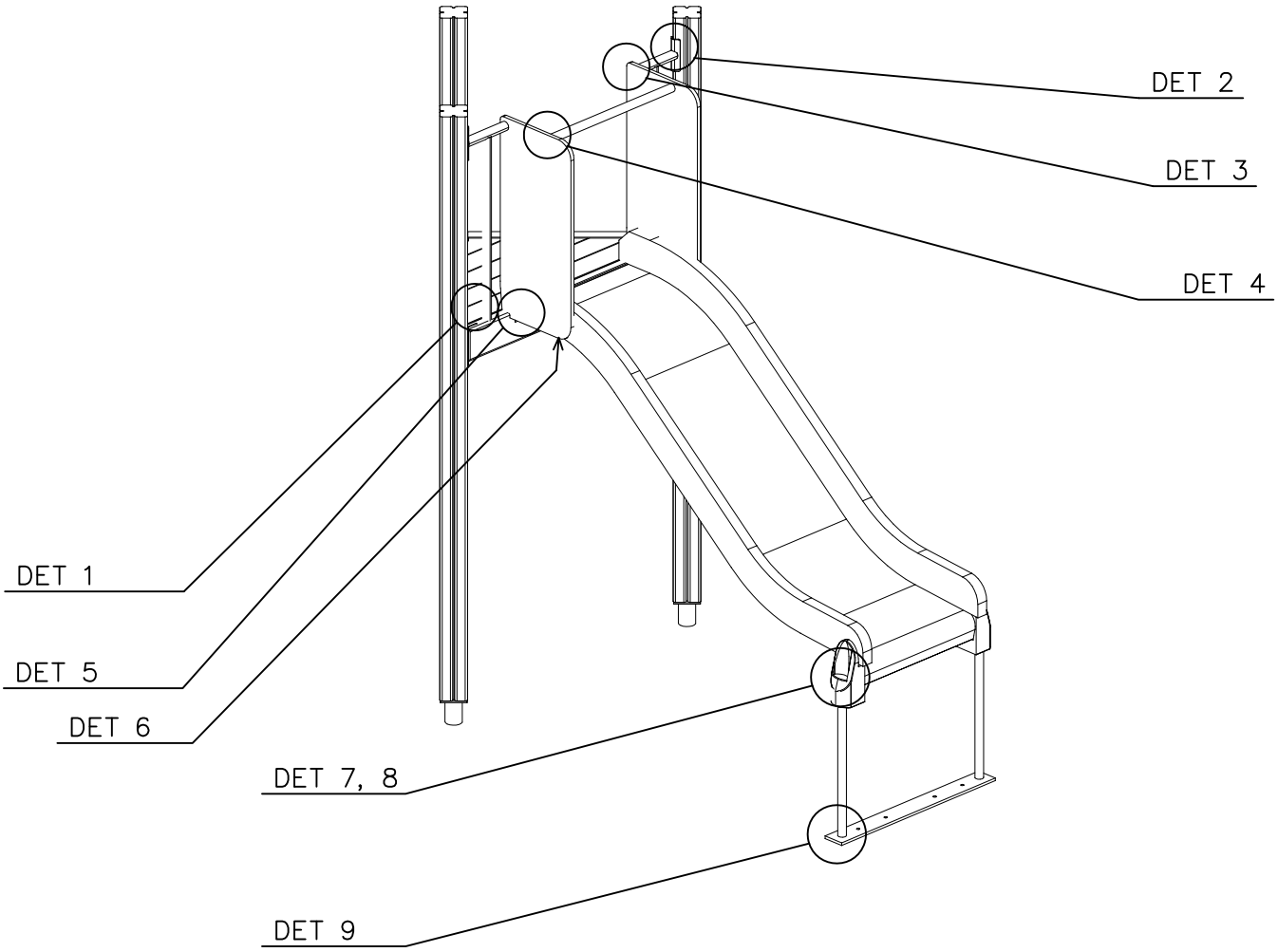

SLIDE OPTIONS

706450 +1470 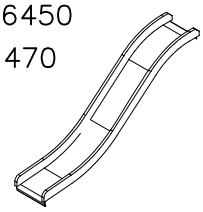	706450–602 706450–603 706450–604	DARK BROWN LIGHT BROWN LIGHT GRAY	
706452 +870 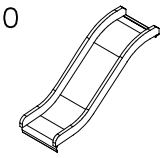	706452–602 706452–603 706452–604	DARK BROWN LIGHT BROWN LIGHT GRAY	

WALL OPTIONS

706371 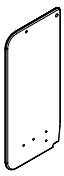	706371–701 706371–702 706371–703 706371–704 706371–705 706371–706	BLUE YELLOW LIME DRARK GRAY LIGHT GRAY RED	706371–707 706371–708	GREEN FUXIA

Copyright Lappset Group Ltd

LAPPSET 80MD

80MD

DATE: 21.9.2016

◯ SLIDE	PCS	◯ SLIDE	PCS	◯ 706371	PCS	◯ 907692	PCS	◯ 901868	PCS	(1) 909876	PCS
	1		1		2		2		1		2
+1470		+870		15x345x750				Ø30x598		M8x40	
(2) 909256	PCS	(3) 907727	PCS	(4) 900727	PCS	(5) 980128	PCS	(6) 999561	PCS		
	4		2		2		15		1		
Ø16/8.4		M10x40		M10x80		Ø7x40		10g			

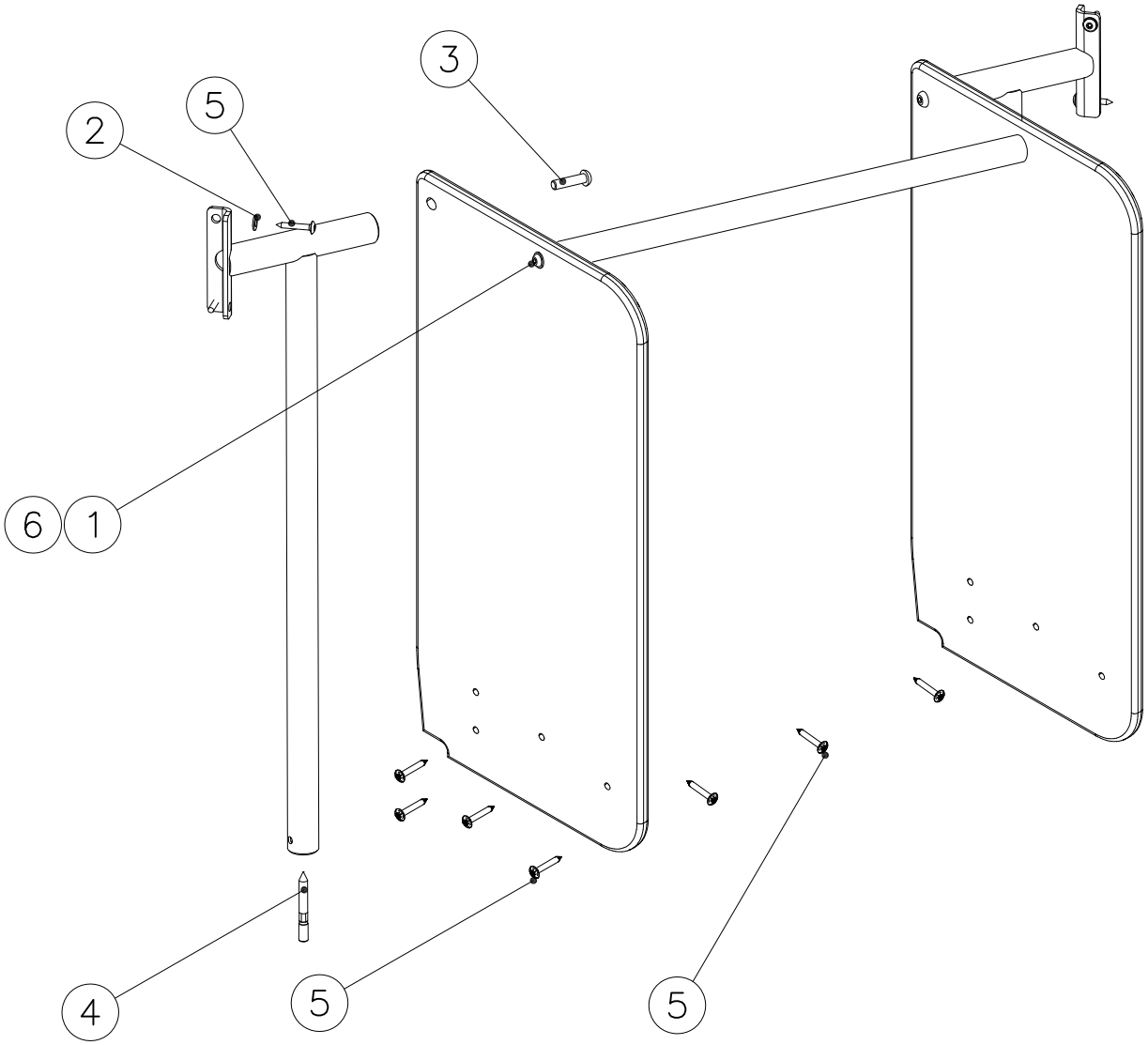

Copyright 1998 Lappset Group Ltd

DET 1

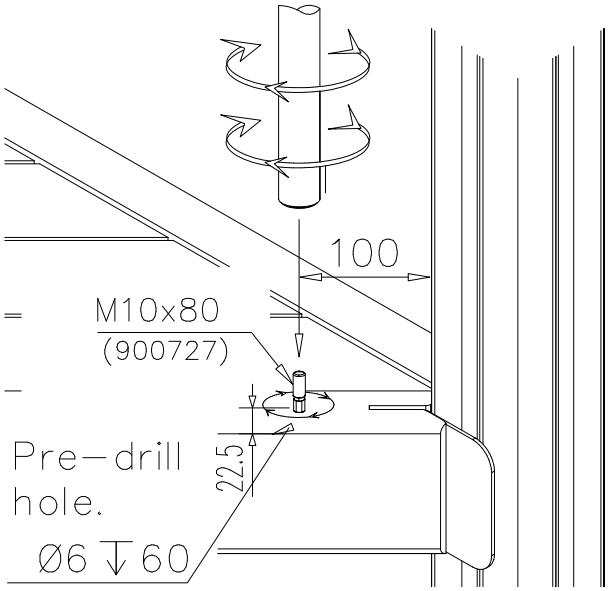

DET 2

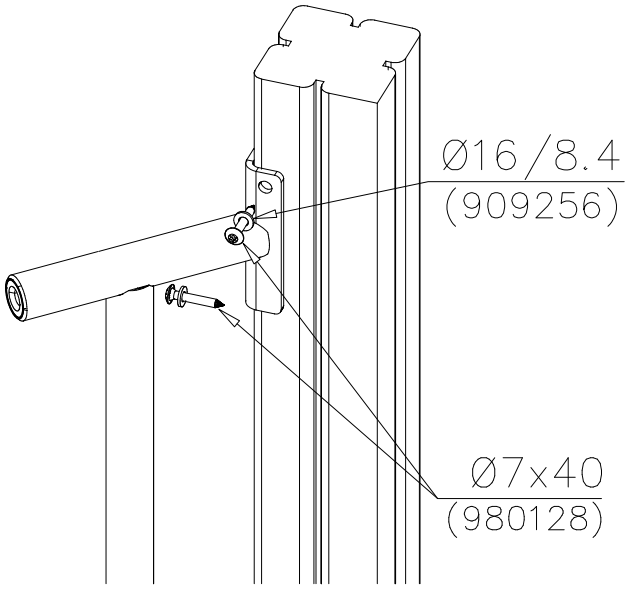

DET 3

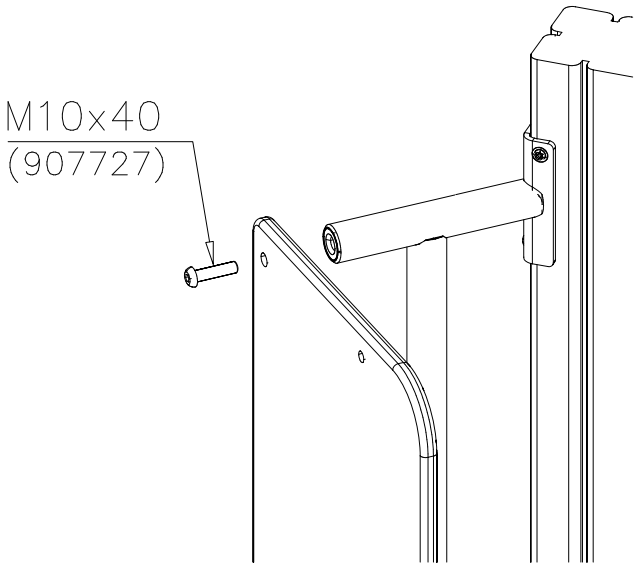

DET 4

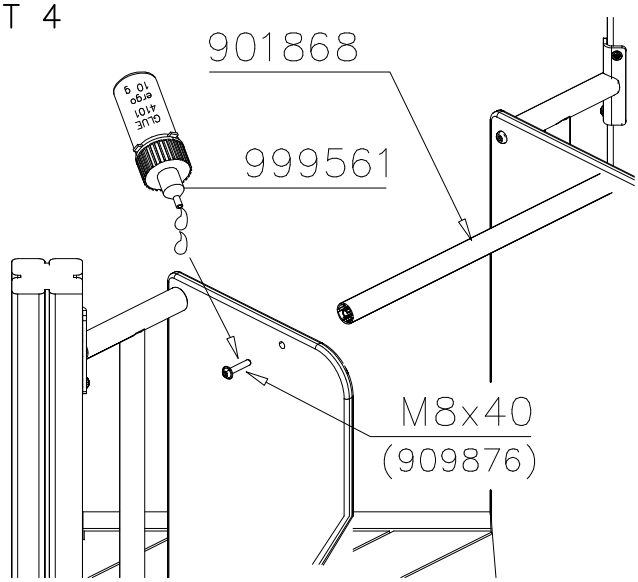

DET 5

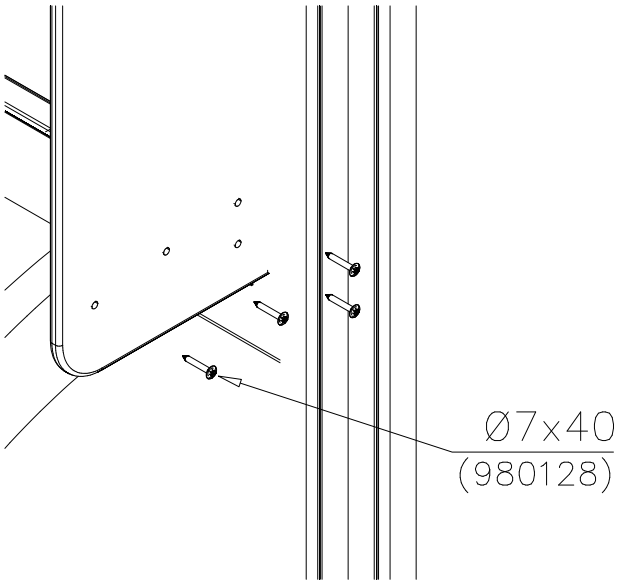

DET 6

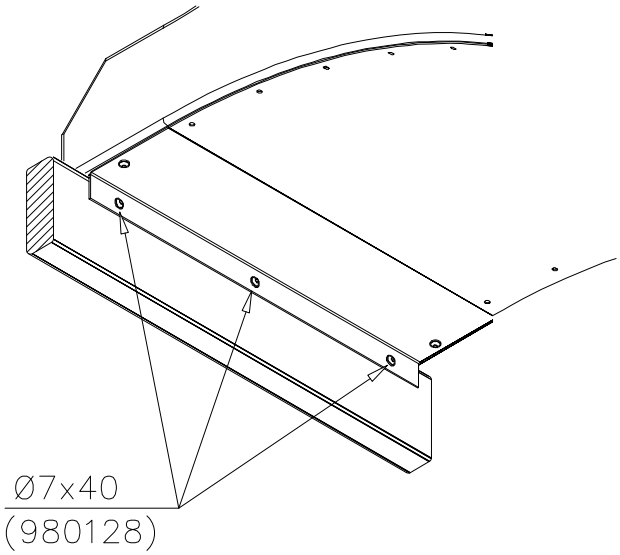

Copyright 1998 Lappset Group Ltd

LAPPSET

DEEP FOUNDATION

DATE: 21.9.2016

	PCS		PCS		PCS		PCS		PCS		PCS
707133	1	901868	2	901879	2	7 909210	4	8 905051	4	9 980128	6
10x80x745		Ø30x598				M8x40		Ø24/8.4		Ø7x40	

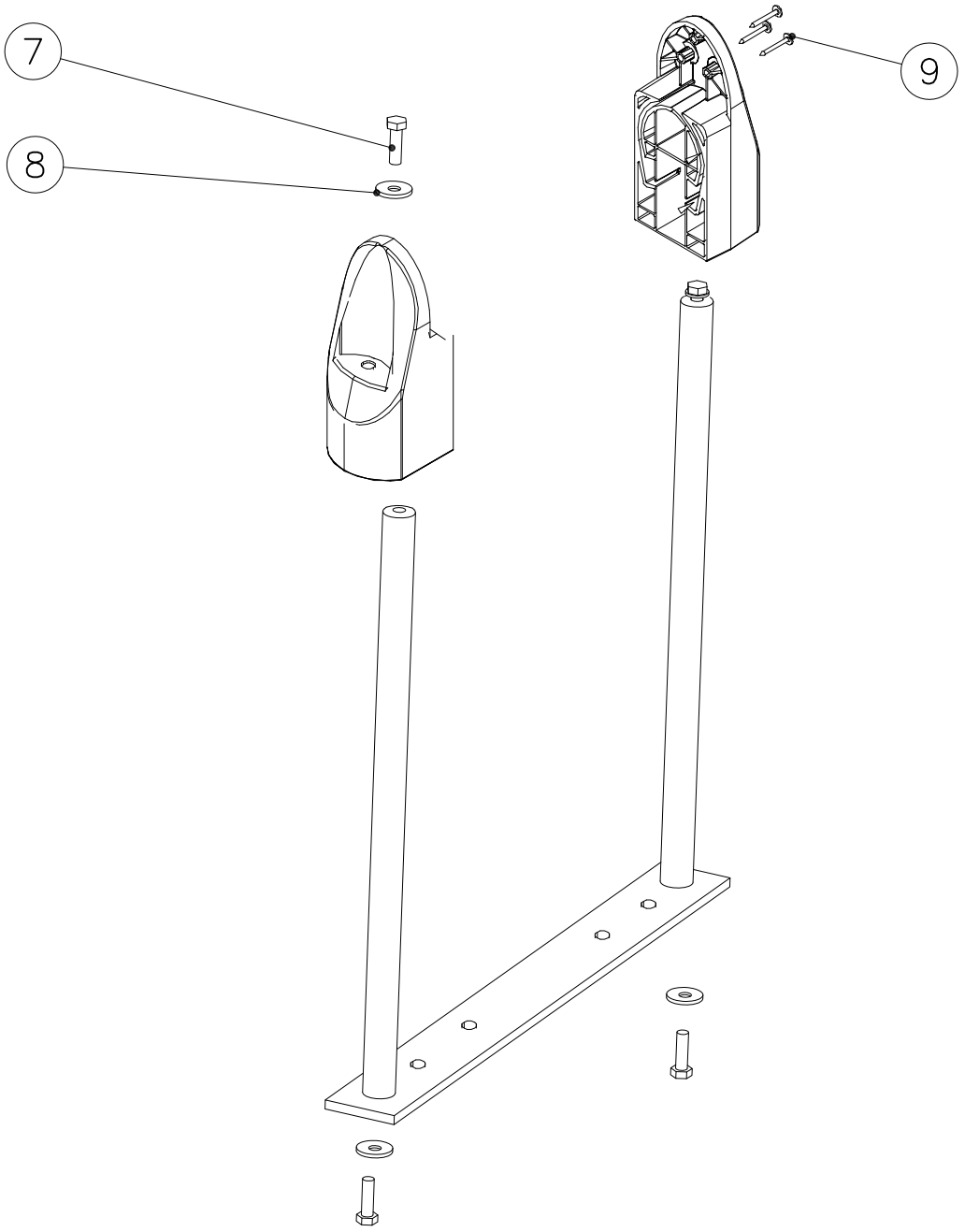

Copyright 1998 Lappset Group Ltd

LAPPSET

DEEP FOUNDATION

DATE: 21.9.2016

DET 7

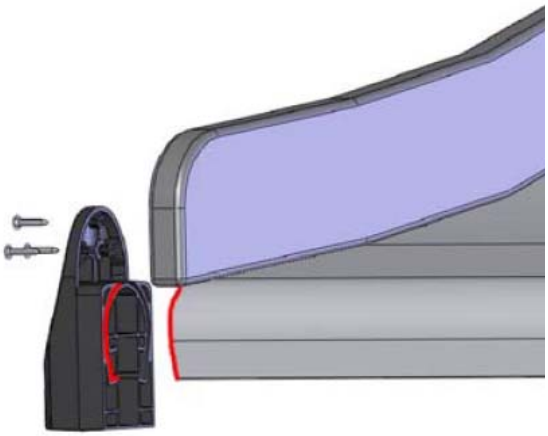

Insert sheet metal IN to the plastic cover.

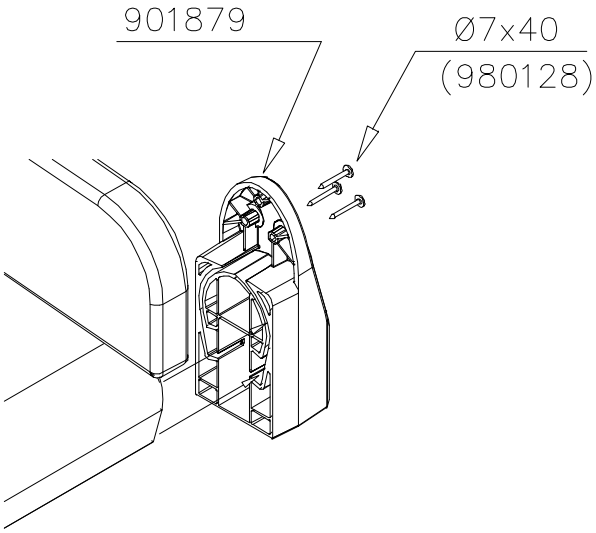

DET 8

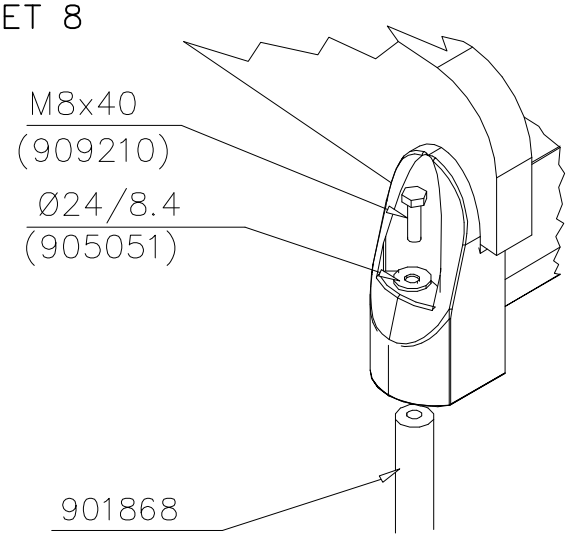

DET 9

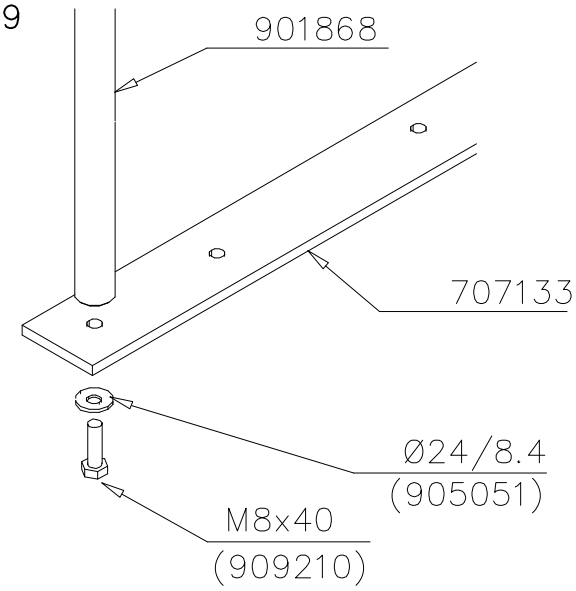

Copyright 1998 Lappset Group Ltd

LAPPSET®

706475

FINNO

DATE: 18.8.2014

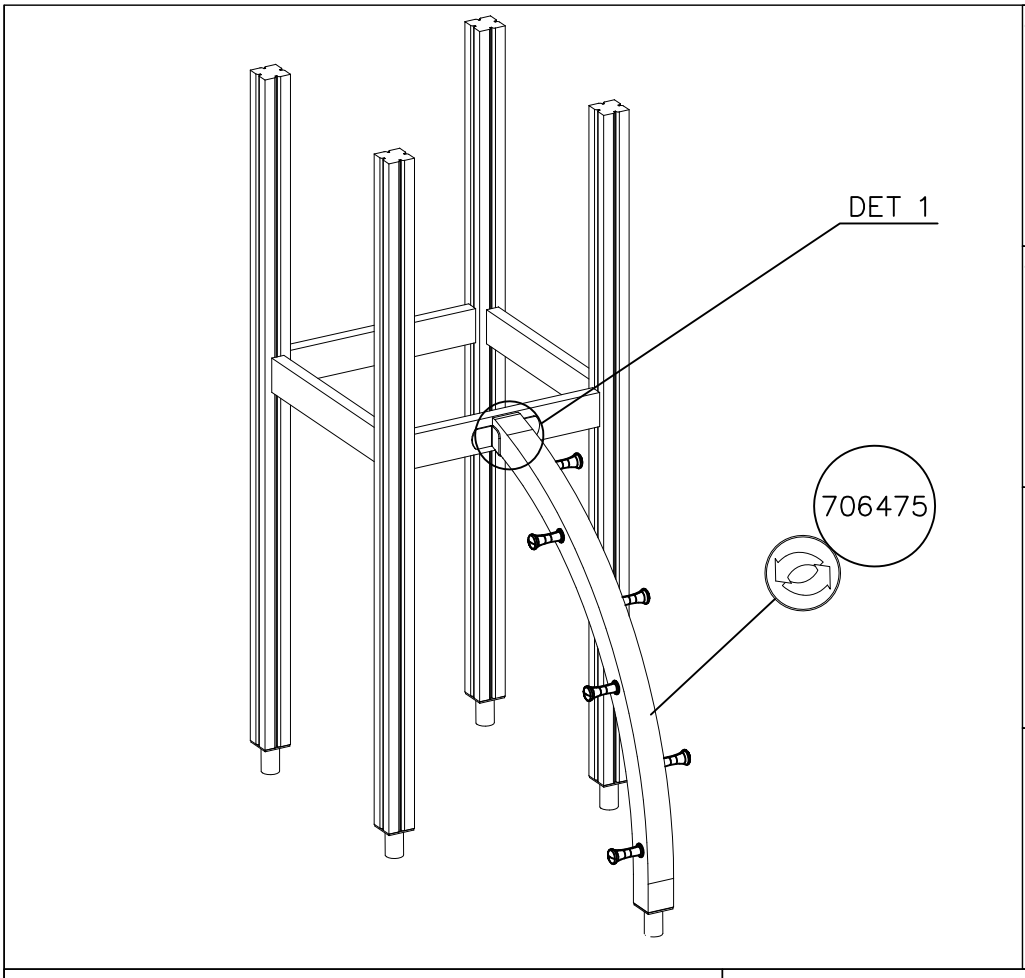

	PCS		PCS
1 706475 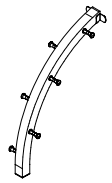	1	2 980128 Ø7x40	6
3 909256 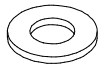 Ø16/8.4	6		

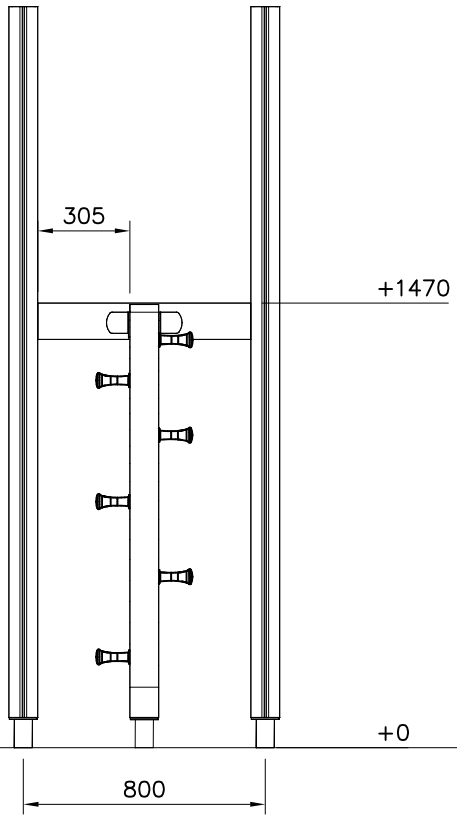

OPTIONS

706475

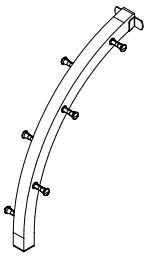

706475–602	DARK BROWN
706475–603	LIGHT BROWN
706475–604	LIGHT GRAY

DET 1

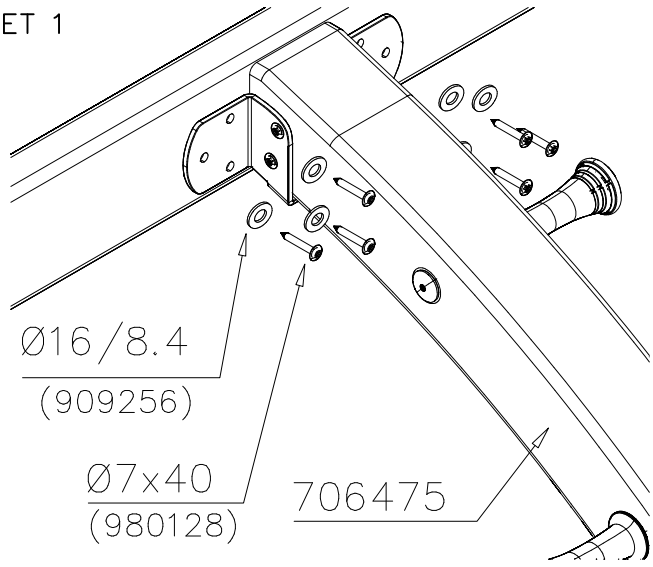

Copyright Lappset Group Ltd

LAPPSET®

WOODEN WALL

FINNO

DATE: 21.8.2014

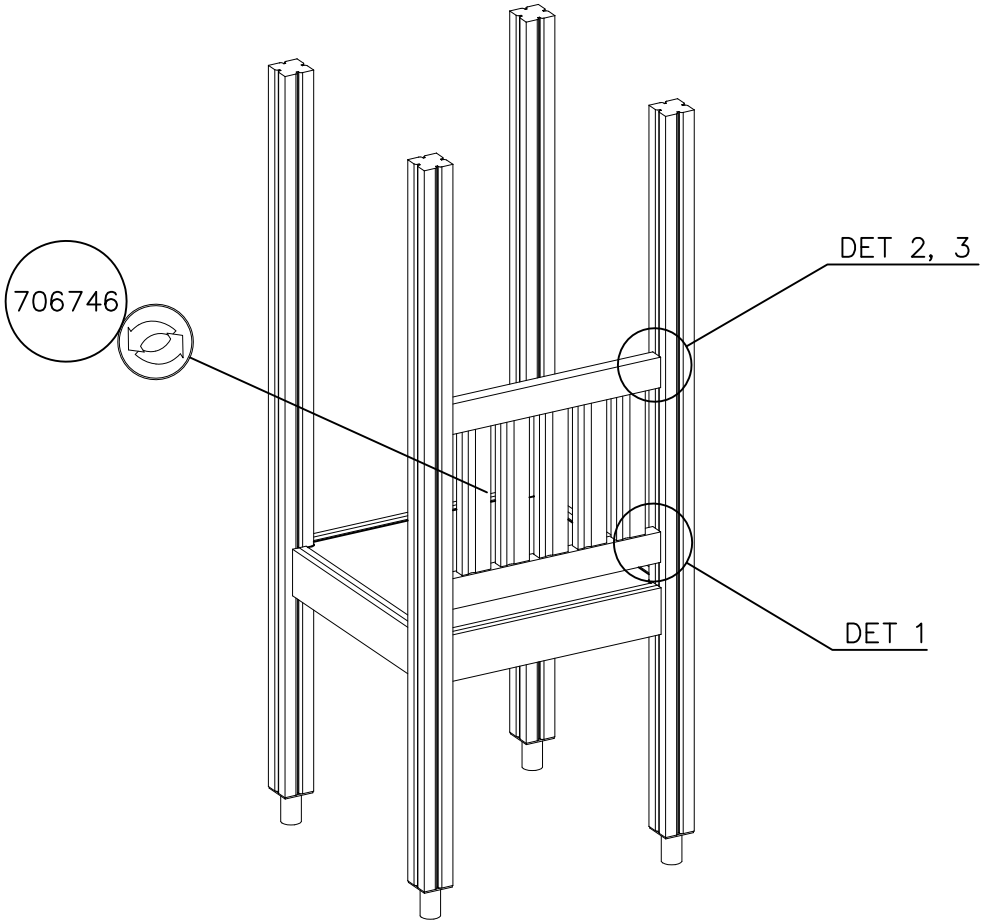

		PCS			PCS
1	706746	1	2	909530	4
	45x640x701			55.9x127.5	
3	900240	4	4	980151	4
	Ø8x70			Ø16/8.4x1.6	
5	905112	4			
	Ø22				

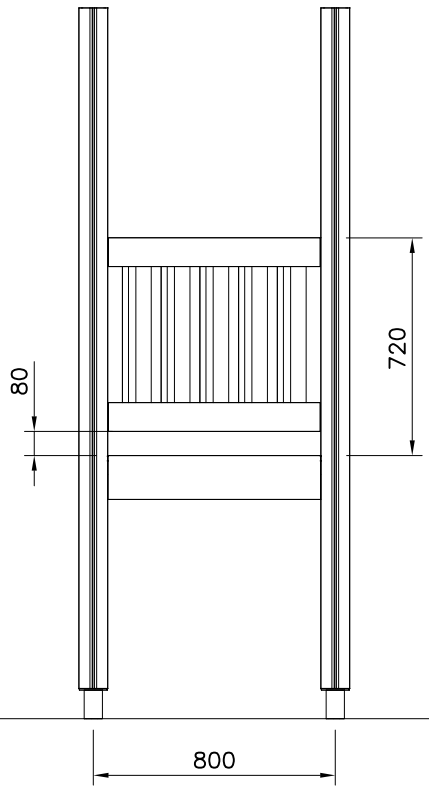

WALL OPTIONS

706746

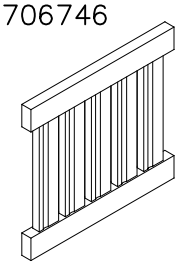

45x640x701

706746-605	DARK GRAY
706746-606	GRAY
706746-607	RED
706746-608	BLUE
706746-609	GREEN
706746-610	YELLOW
706746-611	LIME
706746-612	FUXIA

Copyright Lappset Group Ltd

LAPPSET®

WOODEN WALL

FINNO

DATE: 21.8.2014

DET 1

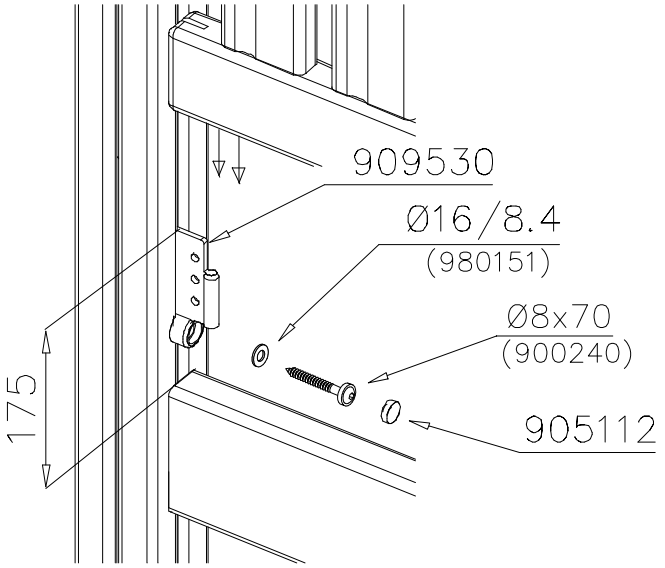

DET 2

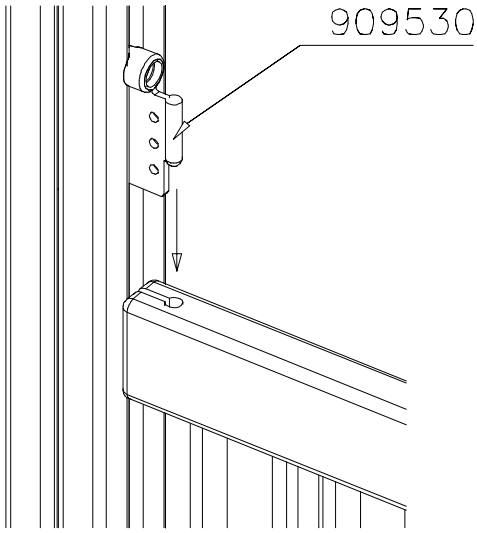

DET 3

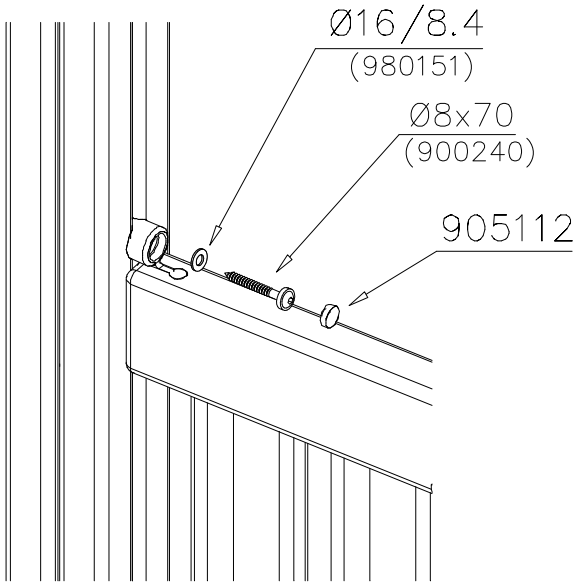

Copyright 1998 Lappset Group Ltd

11.5.2017

1

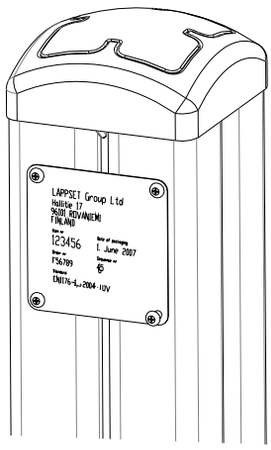

2

Tuotekyltti tulee tuotteen mukana yhdellä seuraavista tavoista:

1) Metallinen tuotekyltti ja kiinnitysruuvit

- Kiinnitä tuotekyltti ruuveilla tolppaan noin 2 metrin korkeuteen kuvan 2 mukaisesti.

2) Tuotekylttitarra

- Puhdista maalattu metalli- tai vaneripinta pölystä ja kosteudesta. Liimaa tarra kuvan 3 mukaisesti.
- Huom. Älä kiinnitä tarraa karheapintaiseen laminaattiin tai maalattuun puuhun.

Vår produktmärkning levereras på ett av följande sätt:

1) Produktskylt i metall

- Fäst skylten med de medföljande skruvarna

2) Självhäftande produktetikett

-Rengördenpulverlackerademetallytanellerlaminatytansåattdenblirfrifrånsmutsochfukt.Fästetikettenenligtfig.3.
- Obs! Fäst ej etiketten på detaljer med skrovlig yta eller på målat trä.

Product label is delivered by one of following ways:

1) Metal product label and screws

- Fasten the label with screws.

2) Label sticker

-Cleanthepaintedmetalorplywoodsurfacefromdirtandmoisture.Fastenthestickerasshowninthefigure3.
- Note. Do not attach the sticker to rough surfaced laminate or painted wood.

La plaque d'informations produit est livrée sous l'une de ces 3 formes :

1) Plaque métallique et vis

- Fixez la plaque à l'aide des vis.

2) Etiquette autocollante

- Avant de coller l'étiquette, nettoyez le composant métallique peint ou la plaque de contreplaqué, de toute saleté. La surface doit être sèche (voir image 3).
- Attention, ne pas coller l'étiquette sur une surface lamellé-collée irrégulière ou sur du bois peint.

Die Auslieferung des Produktaufklebers erfolgt auf eine dieser Arten:

1) Produkt-Schild aus Metall incl. Schrauben

- Die Befestigung des Schildes erfolgt mittels der Schrauben.

2) Aufkleber

-EntfernenSiezunächstSchmutzundFeuchtigkeitvomlackiertenMetallbzw.vonderHolzoberflächeundbringenSieden Aufkleber wie im Bild oben rechts beschrieben auf den gesäuberten Untergrund auf.
- Beachten Sie: Bringen Sie den Aufkleber nicht auf raues laminiertes oder lackiertes Holz an.

LAPPSET®

DESK

FINNO

DATE: 27.7.2015

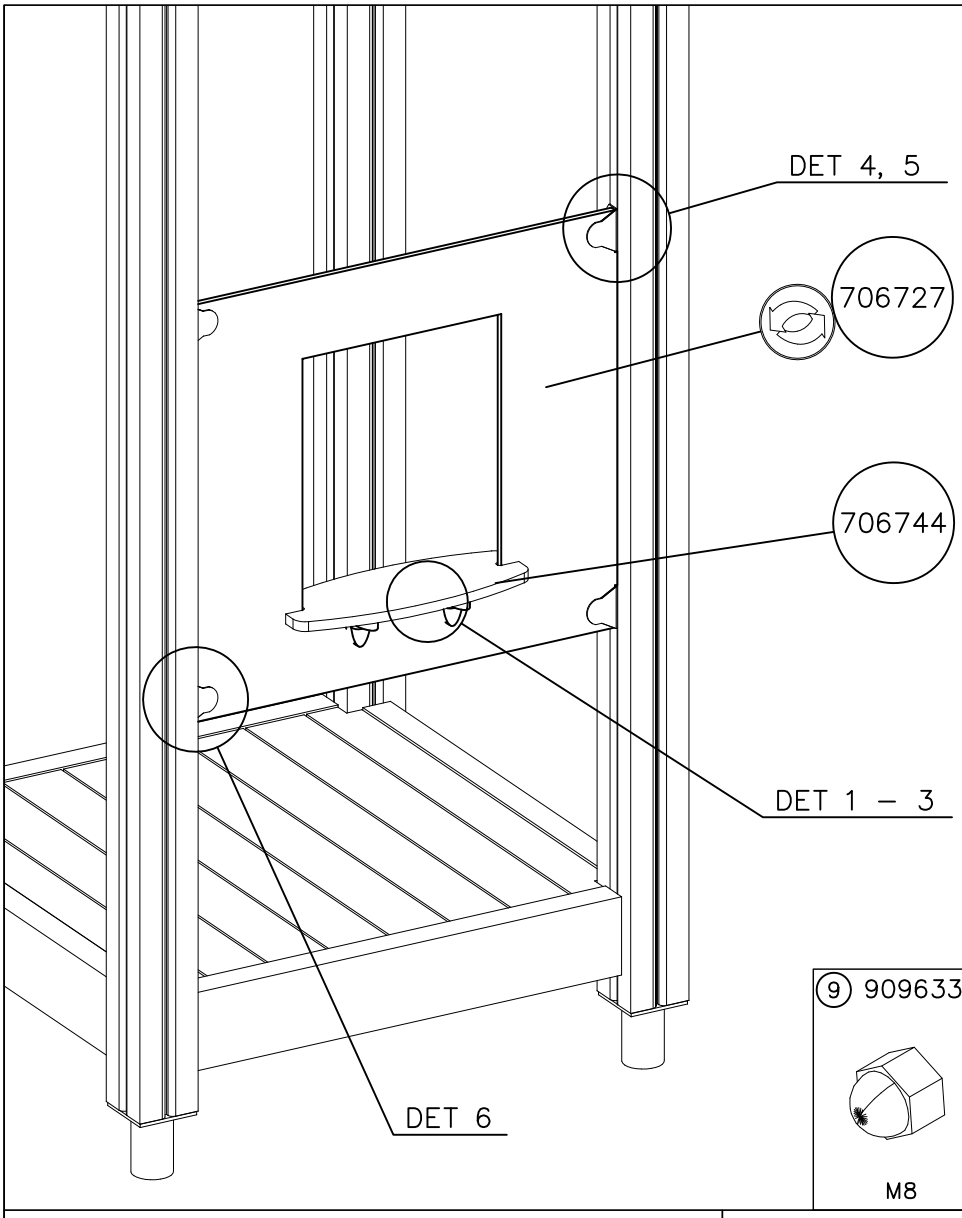

		PCS			PCS
1 706727	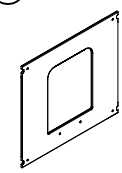 10x702x640	1	2 706744	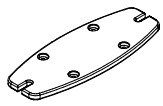 15x145x380	1
3 901570	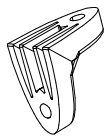 36x55x55	4	4 903176	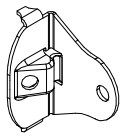	4
5 909855	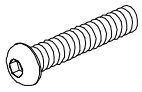 M8x35	2	6 909850	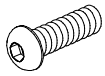 M8x25	8
7 909256	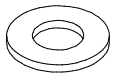 Ø16/8.4x1.6	8	8 980150	M8	6
9 909633	M8	4	10 980123	Ø7x60	4
11 905112	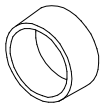 Ø22	4			

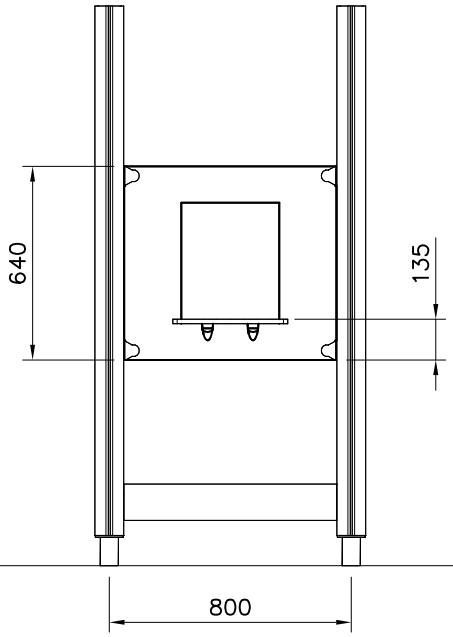

WALL OPTIONS		
706727 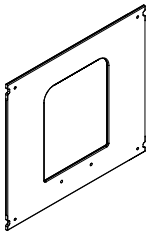 10x640x702	706727–701	BLUE
	706727–702	YELLOW
	706727–703	LIME
	706727–704	DARK GRAY
	706727–705	LIGHT GRAY
	706727–706	RED
	706727–707	GREEN
	706727–708	FUXIA

WALL OPTIONS		
706744 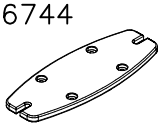 15x145x380	706744	DARK GRAY

Copyright Lappset Group Ltd

LAPPSET®

DESK

FINNO

DATE: 27.7.2015

DET 1

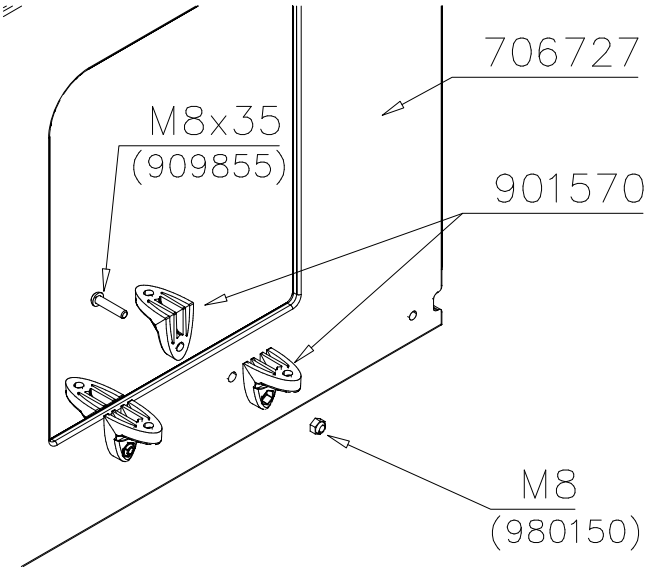

DET 2

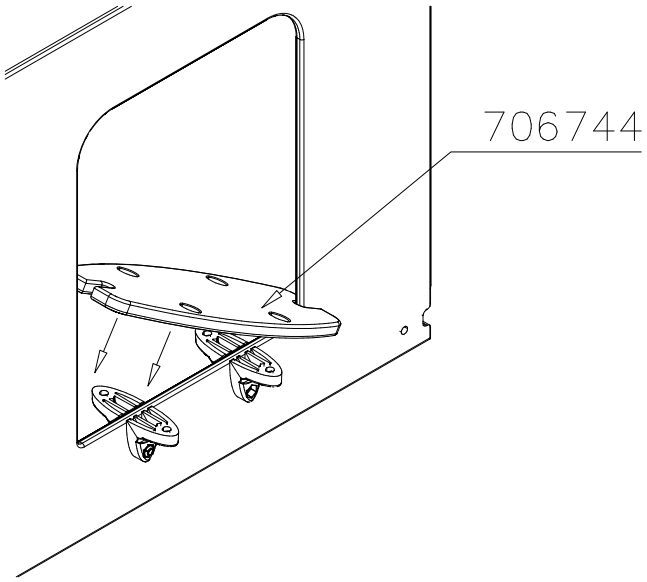

DET 3

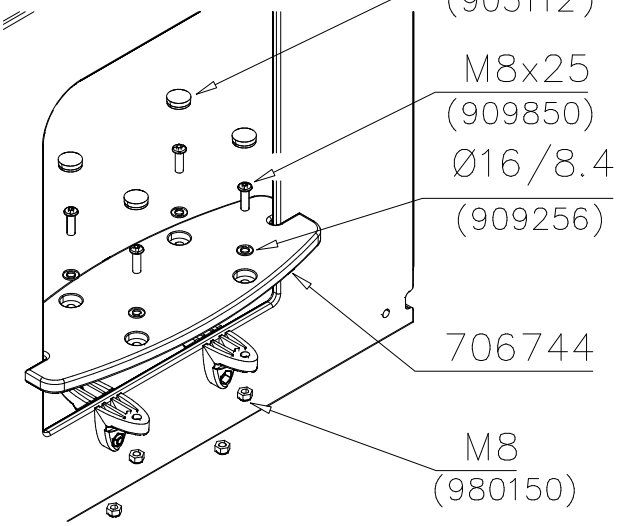

DET 4

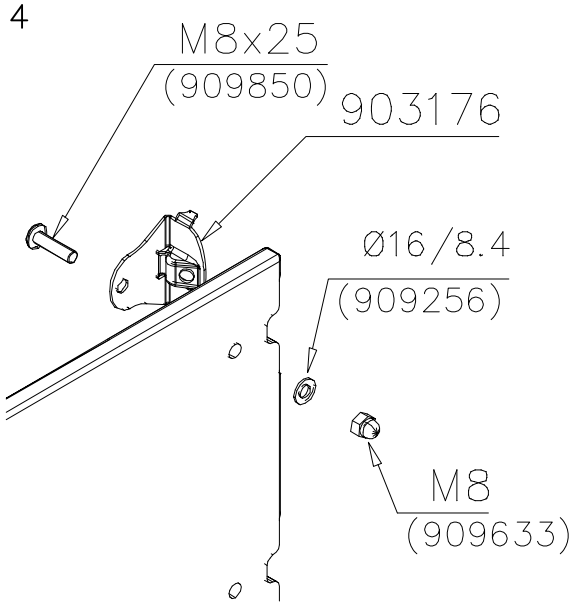

DET 5

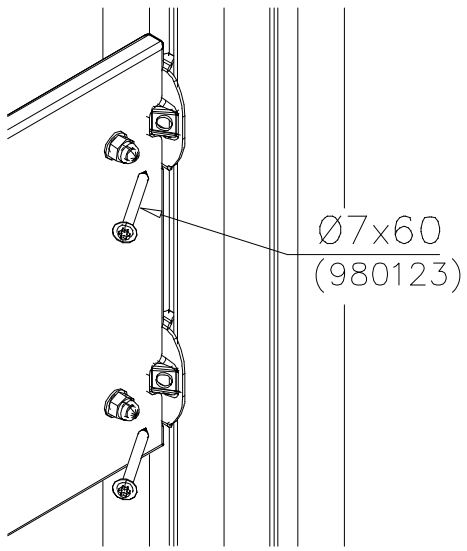

DET 6

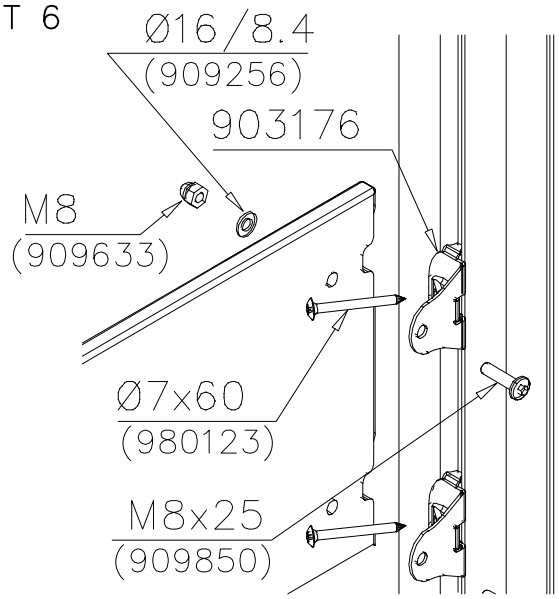

Copyright 1998 Lappset Group Ltd

LAPPSET®

RIDGE ROOF

FINNO

DATE: 27.5.2016

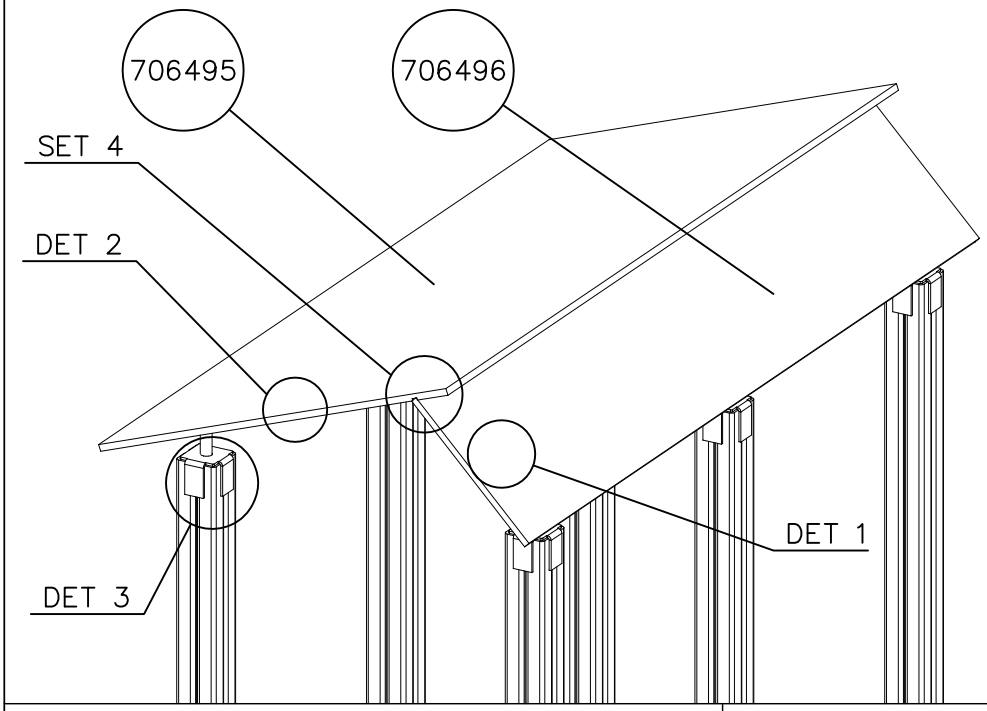

		PCS
1	706495 (10x900x1900)	1
2	706496 (10x390x1900)	1
3	907667	3
4	980123 (Ø7x60)	12
5	909256 (Ø16/8.4)	24
6	909633 (M8)	12

DET 1

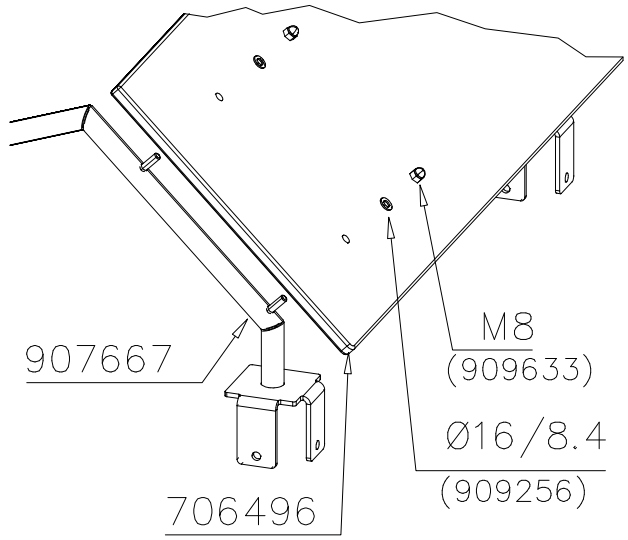

DET 2

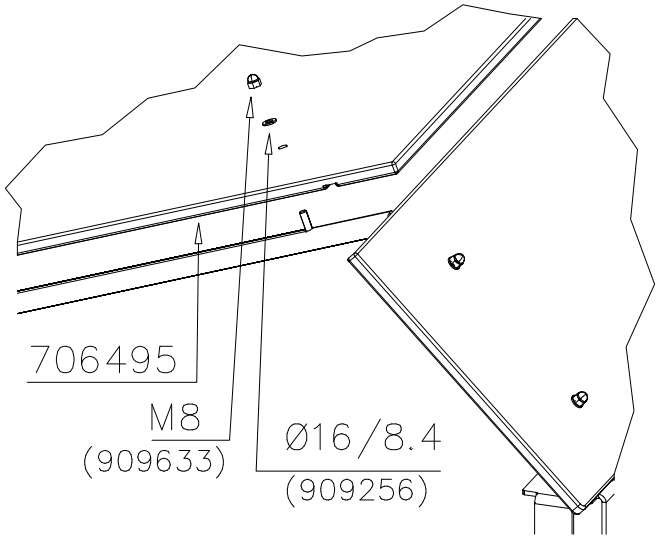

DET 3

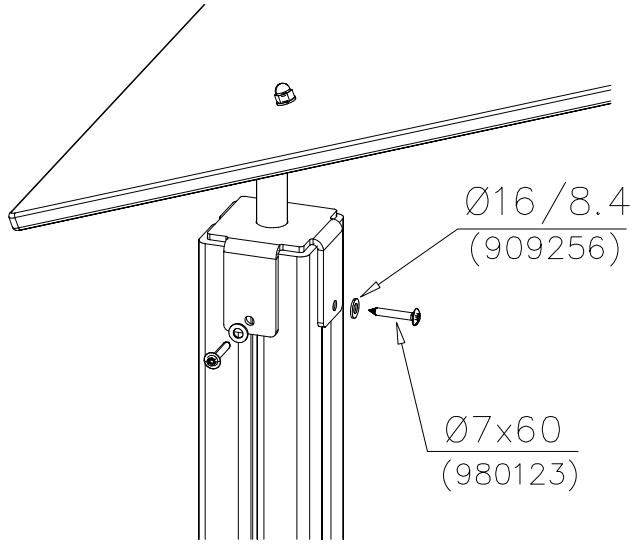

DET 4

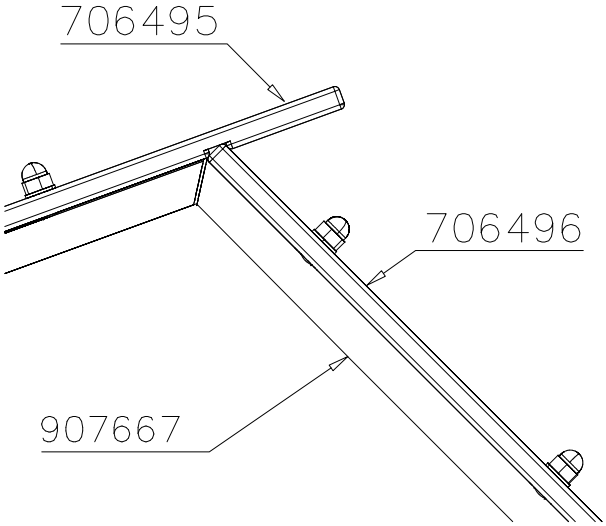

Copyright Lappset Group Ltd

LAPPSET®

DIAG. W-WALL

FINNO

DATE: 22.8.2014

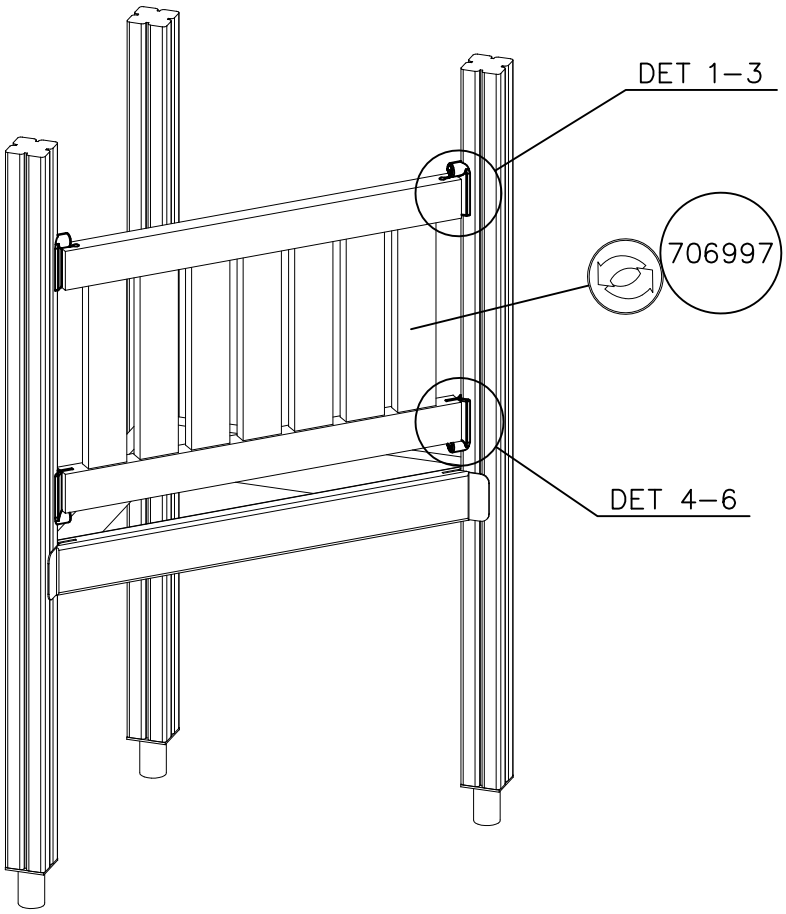

		PCS			PCS
1	706997	1	2	909625	4
	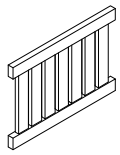			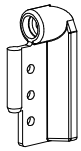	
	45x640x984			36x67x128	
3	909256	4	4	900240	4
	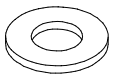			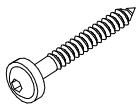	
	Ø16/8.4			Ø8x70	
5	905112	4			
	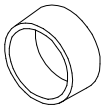				
	Ø22				

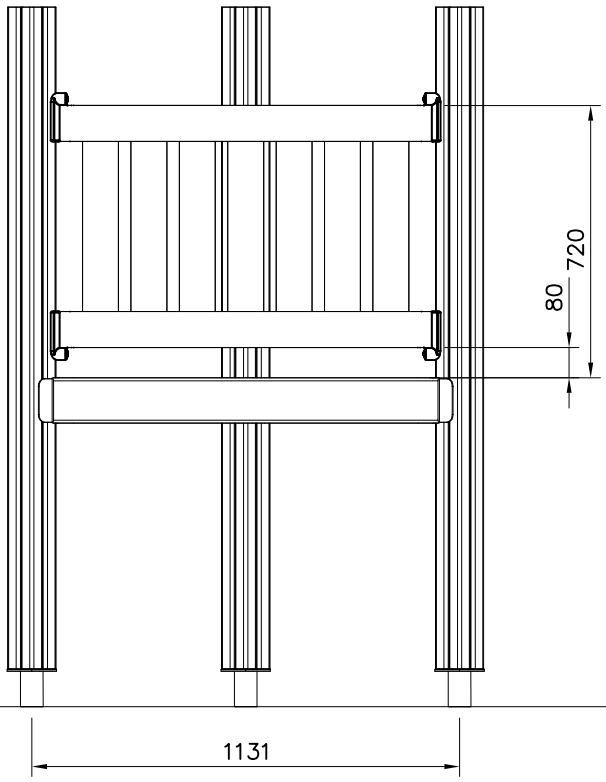

WOODEN WALL OPTIONS

706997	706997–605	DARK GRAY
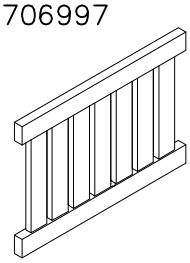	706997–606	GRAY
	706997–607	RED
	706997–608	BLUE
	706997–609	GREEN
	706997–610	YELLOW
	706997–611	LIME
45x640x984	706997–612	FUXIA

Copyright Lappset Group Ltd

LAPPSET®

DIAG. W-WALL

FINNO

DATE: 22.8.2014

DET 1

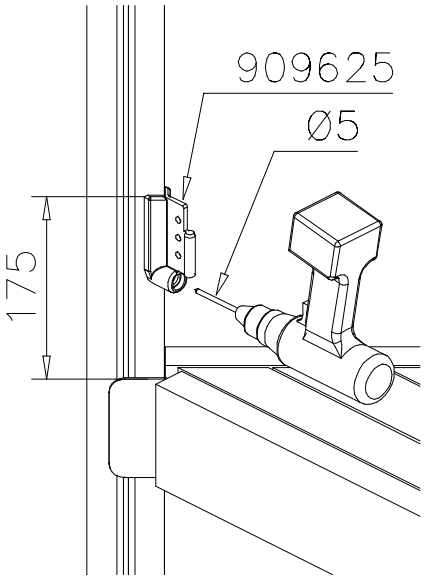

DET 2

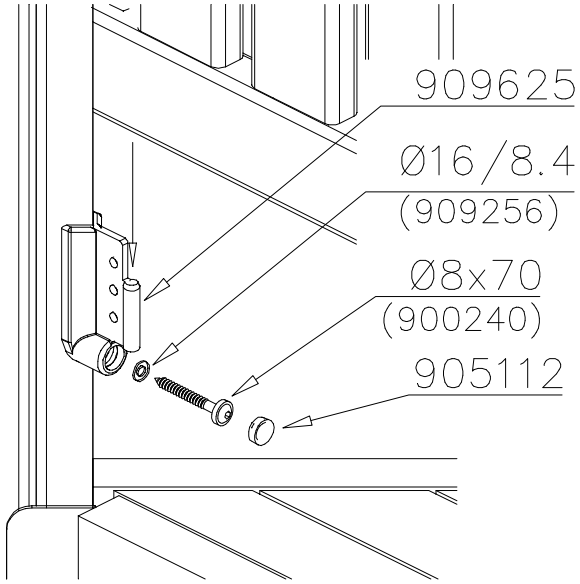

DET 3

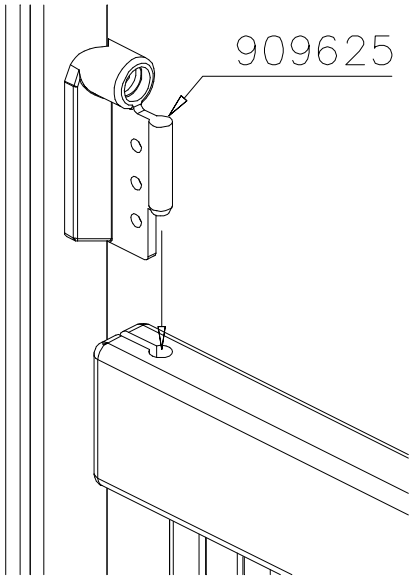

DET 4

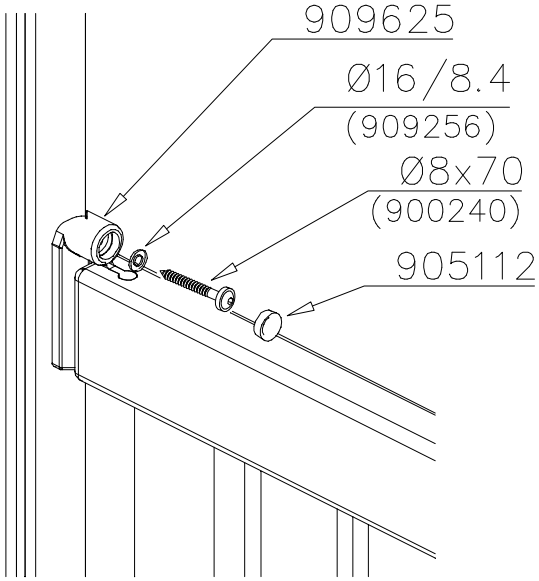

DET 5

DET 6

Copyright 1998 Lappset Group Ltd

LAPPSET®

FINNO

STAIRS +870

DATE: 28.5.2015

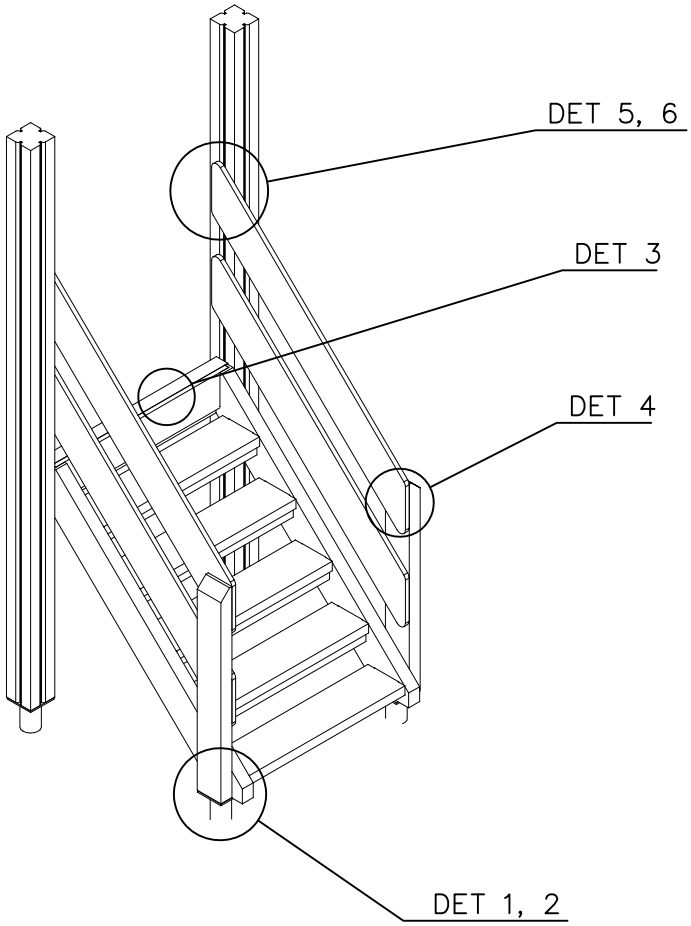

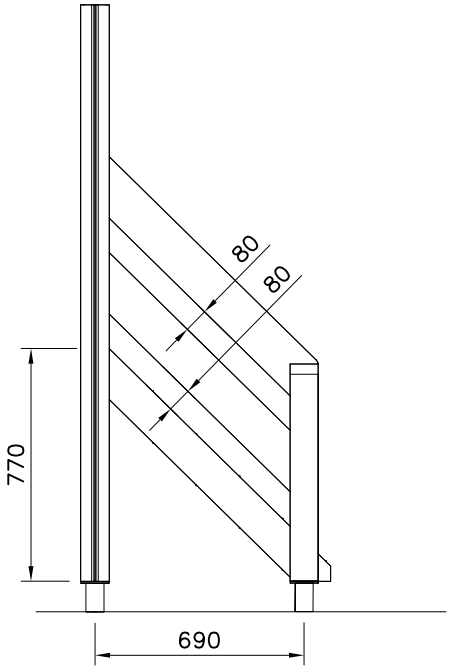

Copyright Lappset Group Ltd

LAPPSET®

STAIRS +870

FINNO

DATE: 28.5.2015

DET 1

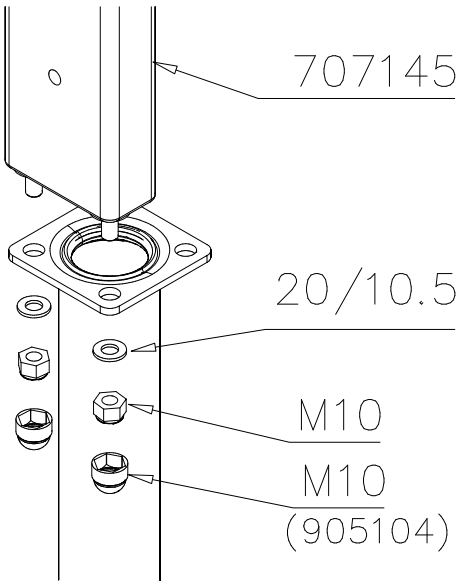

DET 2

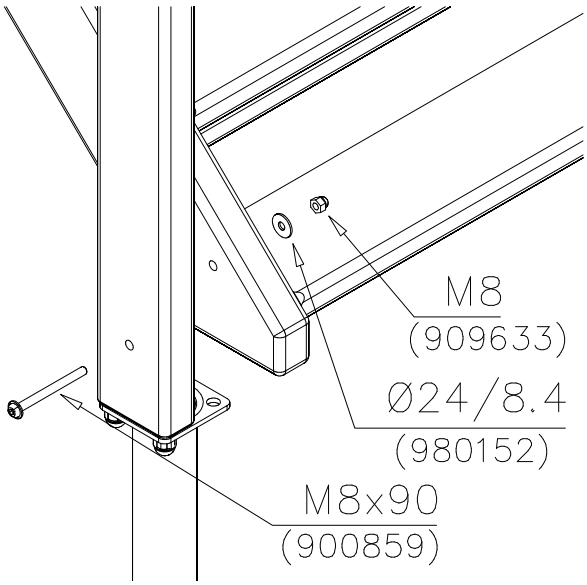

DET 3

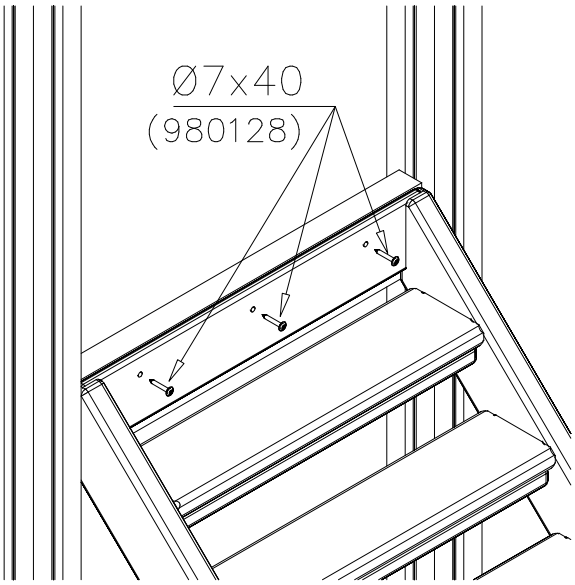

DET 4

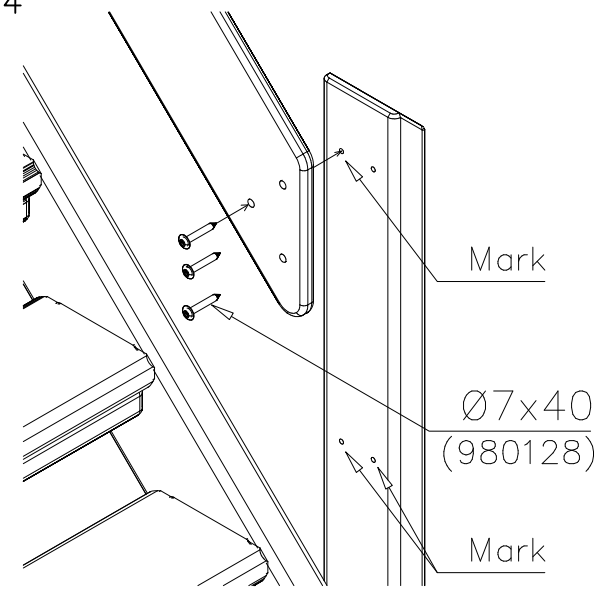

DET 5

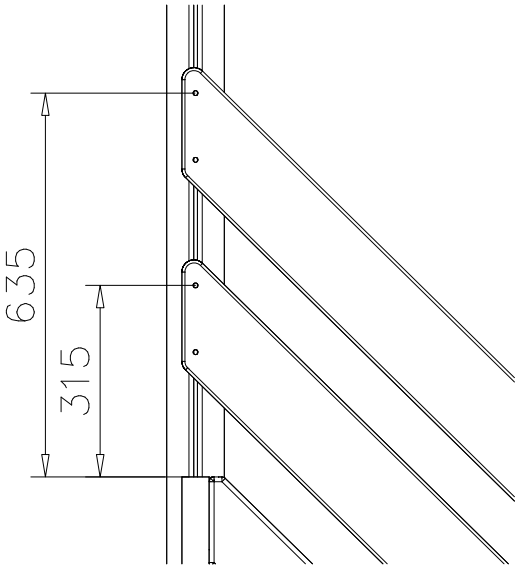

DET 6

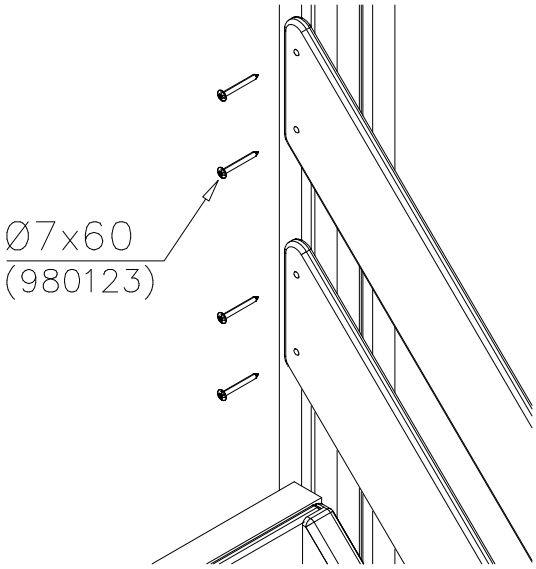

Copyright 1998 Lappset Group Ltd

LAPPSET®

FINNO

STAIRS +870

DATE: 28.5.2015

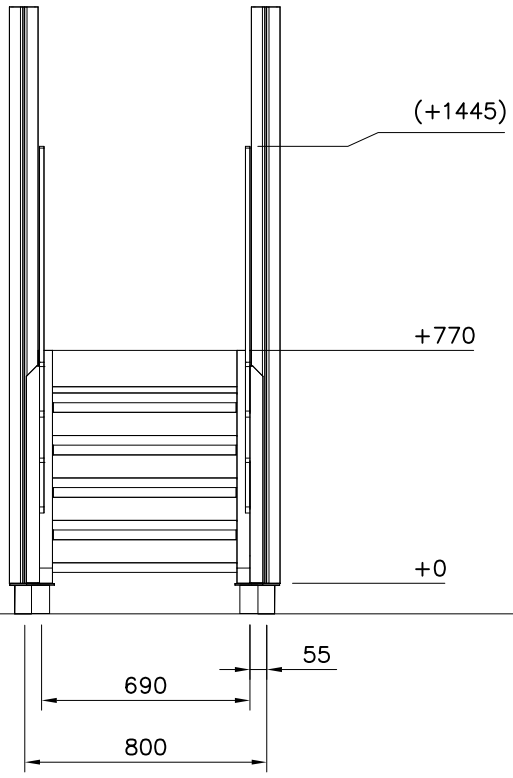

Copyright 1998 Lappset Group Ltd

LAPPSET STAIRS +870

FINNO

DATE: 28.5.2015

STAIRS OPTIONS +870

707191	707191–602 DARK BROWN 707191–603 LIGHT BROWN 707191–604 LIGHT GRAY	

RAILING OPTIONS

RAILS 707146 15x145x1153	707146–701 BLUE 707146–702 YELLOW 707146–703 LIME 707146–704 DARK GRAY 707146–705 LIGHT GRAY 707146–706 RED	707146–707 GREEN 707146–708 FUXIA
POST 707145 43x93x717	707145–602 DARK BROWN 707145–603 LIGHT BROWN 707145–604 LIGHT GRAY	

POST OPTIONS

1 707191 +870	PCS 1	2 707145 43x93x717	PCS 2	3 707146 15x145x1153	PCS 4	4 900859 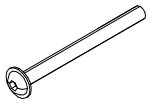 M8x90	PCS 2	5 905104 M10	PCS 4	6 909633 M8	PCS 2
7 980123 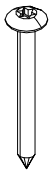 Ø7x60	PCS 8	8 980128 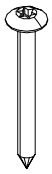 Ø7x40	PCS 15	9 980152 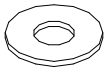 Ø24/8.4x2	PCS 2		PCS		PCS		PCS

Copyright 1998 Lappset Group Ltd

LAPPSET®

707333

FINNO

DATE: 19.12.2018

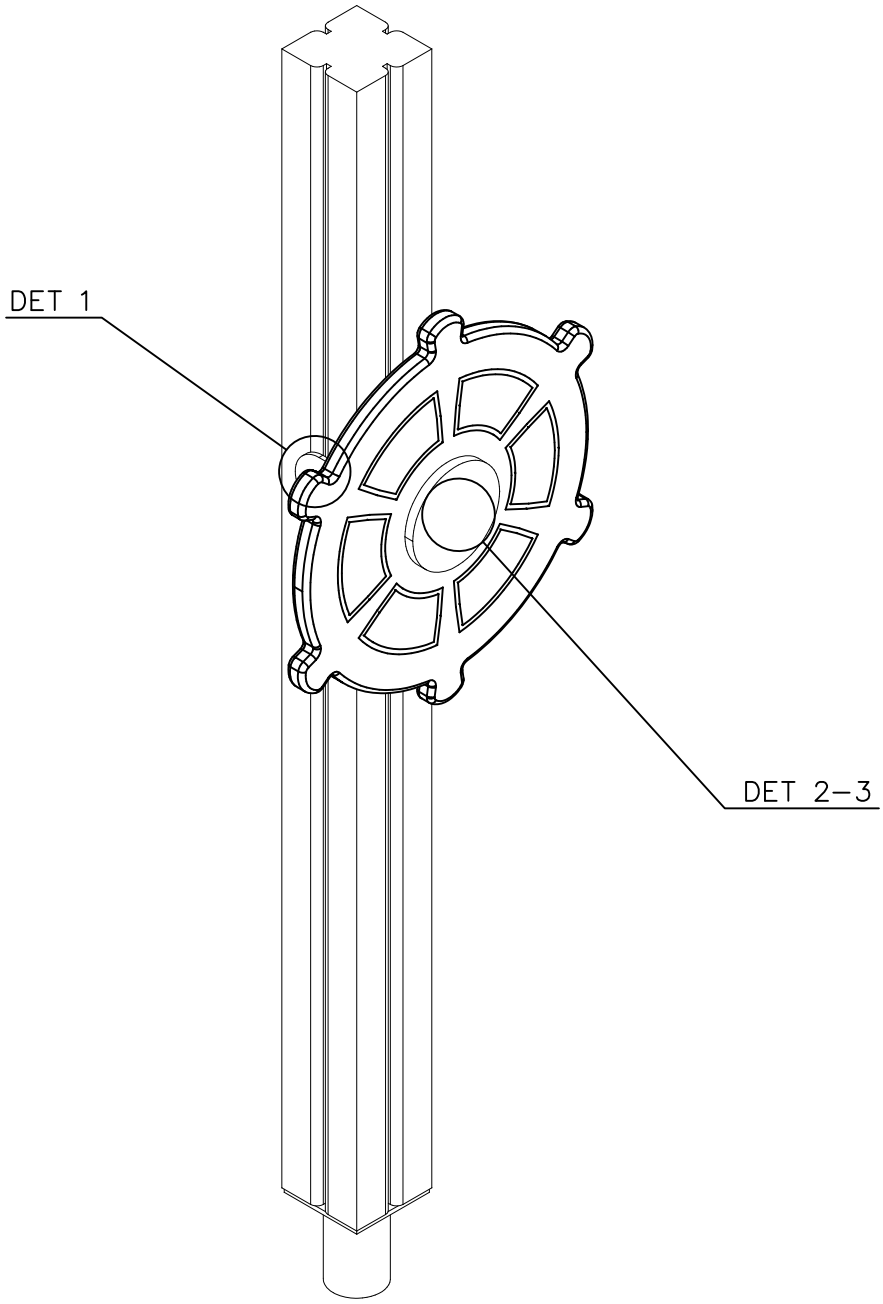

1	900240	PCS	2	2	909209	PCS	1
	Ø8x70				Ø17.3x2.4		
3	909644	PCS	1	4	980106	PCS	2
	M12				Ø5x40		
5	980165	PCS	1			PCS	
	Ø24/13x3						
		PCS				PCS	
		PCS				PCS	
◯	707320	PCS	1	◯	905879	PCS	1

DET 1

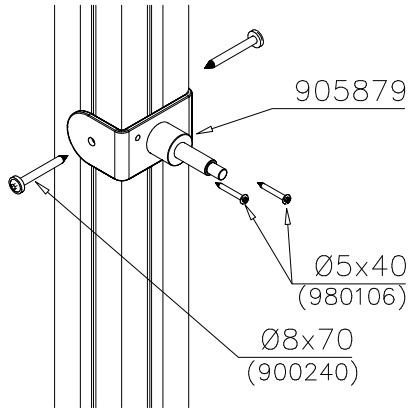

DET 2

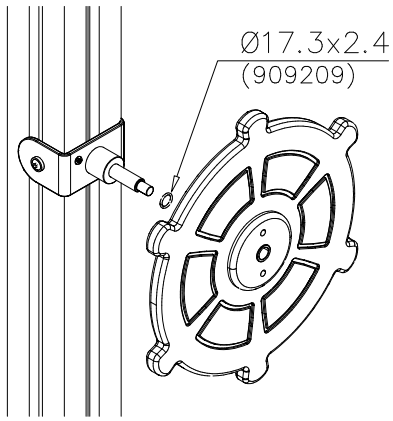

DET 3

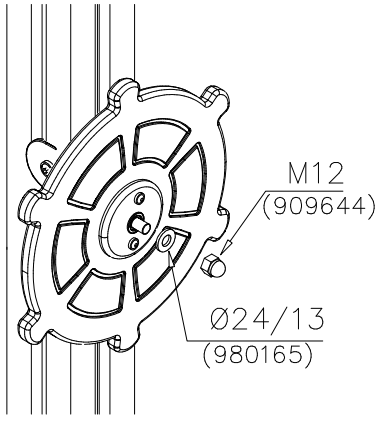

Copyright Lappset Group Ltd

LAPPSET®

GAME WALL

M80

DATE: 4.11.2019

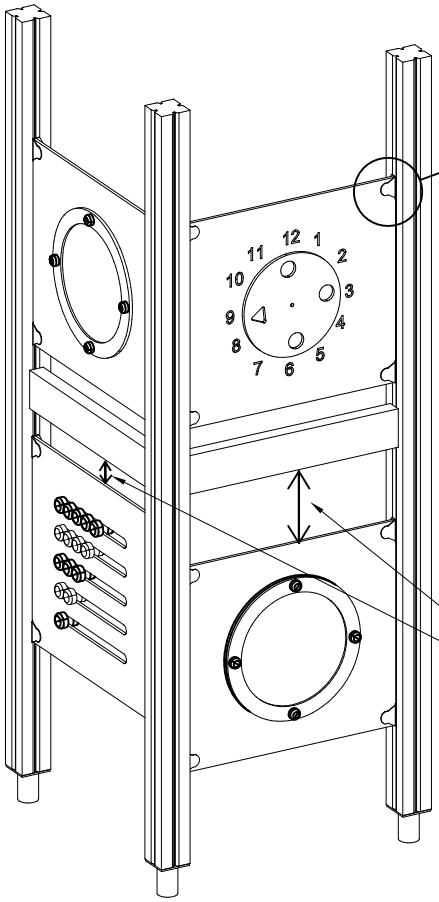

*Note:
No gaps between:
8–25mm
89–230mm

		PCS
1	903176	4
2	909850 M8x25	4
3	909256 Ø16/8.4x1.6	8
4	909633 M8	4
5	980123 Ø7x60	4

COLOR OPTIONS	
–701	BLUE
–702	YELLOW
–703	LIME
–704	DARK GRAY
–705	LIGHT GRAY
–706	RED
–707	GREEN
–708	FUXIA

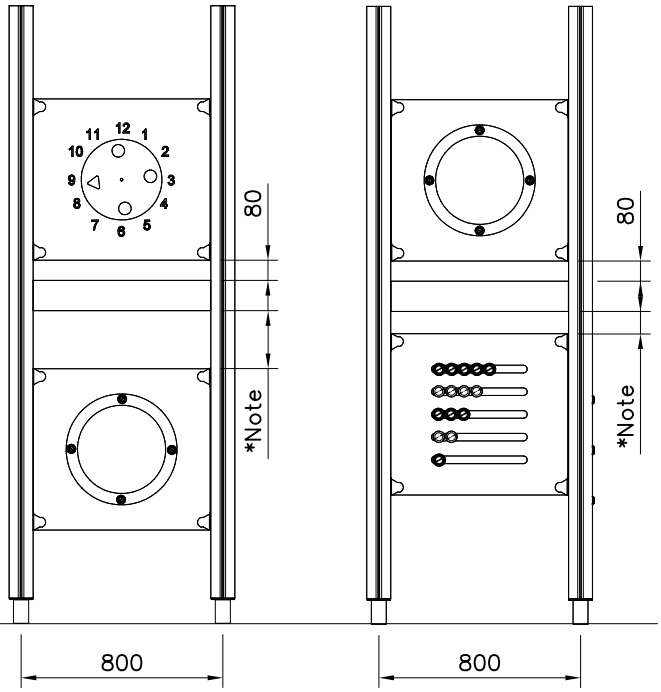

Copyright Lappset Group Ltd

LAPPSET®

GAME WALL

M80

DATE: 4.11.2019

GAME WALL OPTIONS

706766	706772	706308	707453
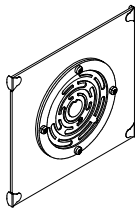 640x702	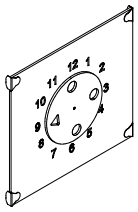 640x702	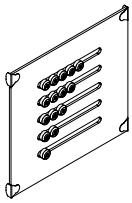 640x702	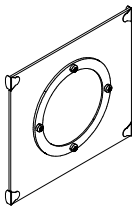 640x702
707209	**705705**	**707433**	**707386**
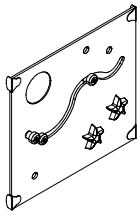 640x702	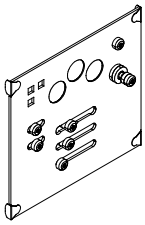 640x702	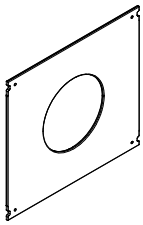 640x702	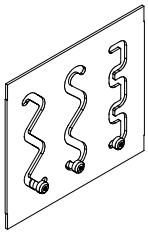 640x702
709403	**709358**	**709405**	
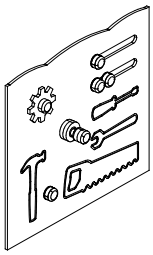 640x702	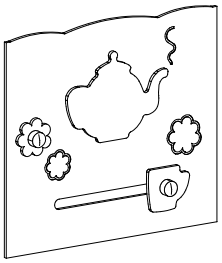 640x702	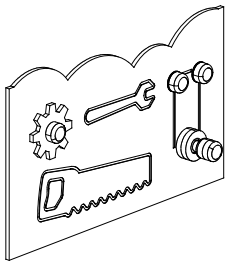 420x702	

DET 1

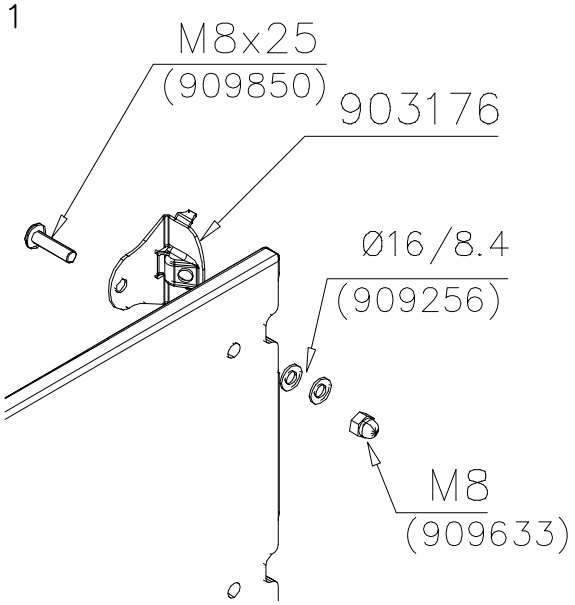

DET 2

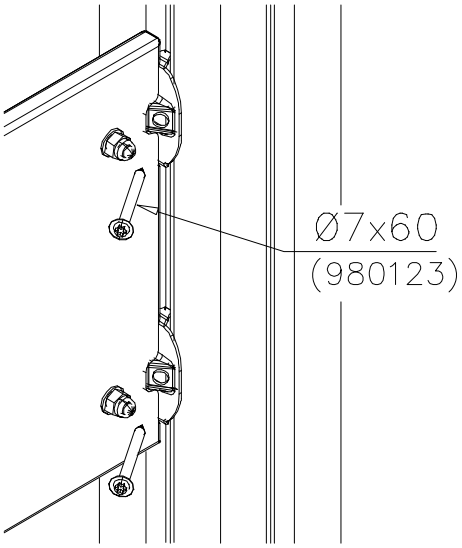

Copyright 1998 Lappset Group Ltd

LAPPSET®

707585

FINNO

DATE: 15.3.2016

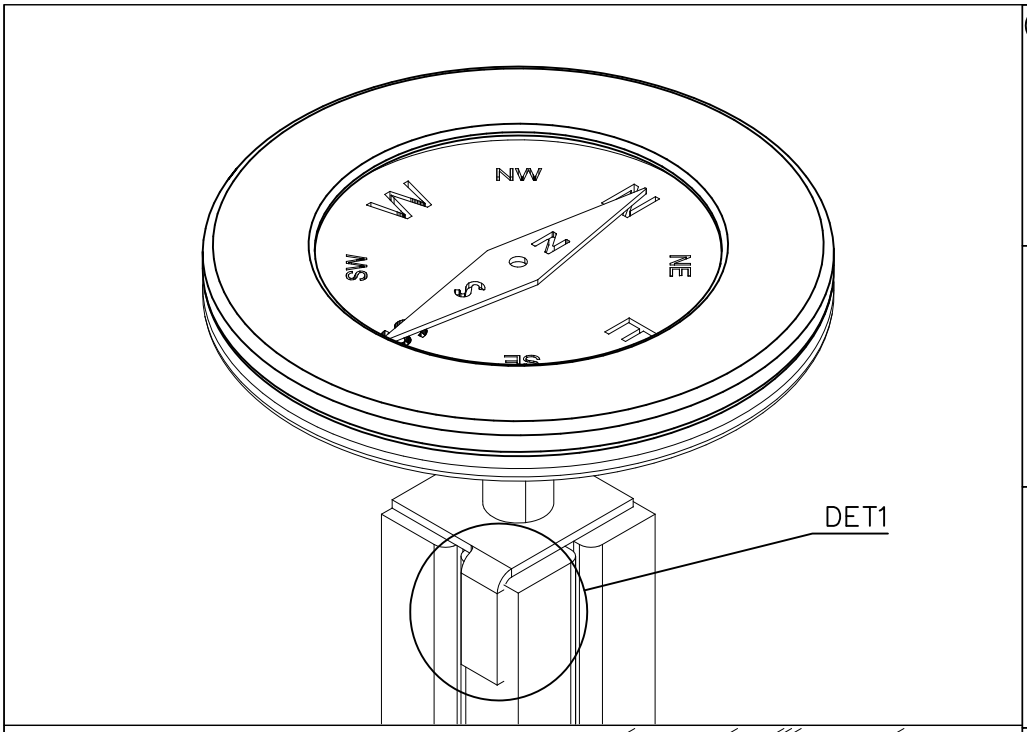

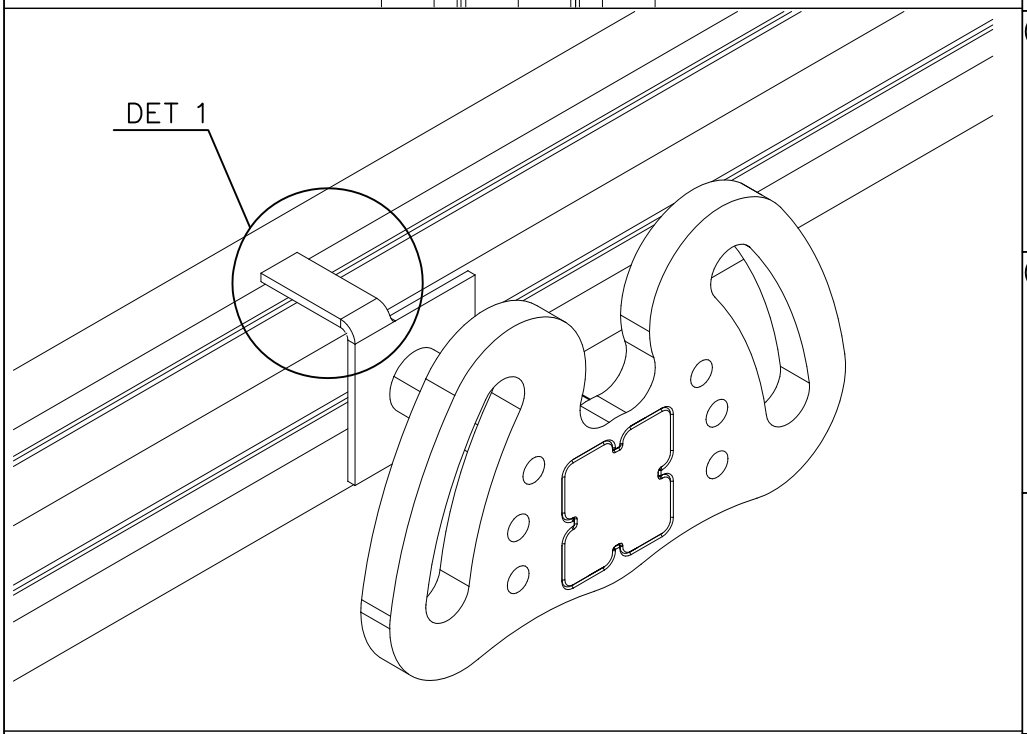

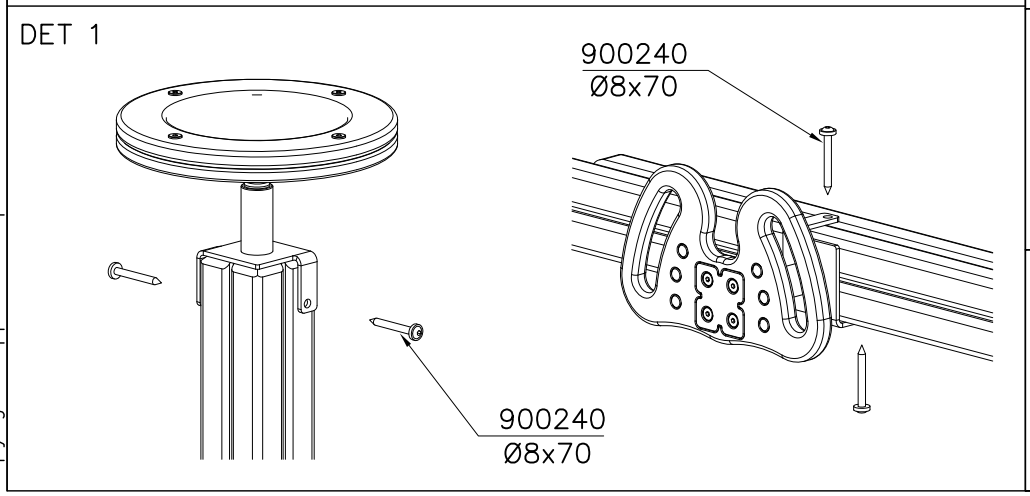

1 900240 Ø8x70	PCS 2		PCS
	PCS		PCS
	PCS		PCS
707302	PCS 1	707303	PCS 1
707304	PCS 1	707305	PCS 1
	PCS		PCS
	PCS		PCS
	PCS		PCS

Copyright Lappset Group Ltd

LAPPSET®

707615

FINNO

DATE: 3.6.2016

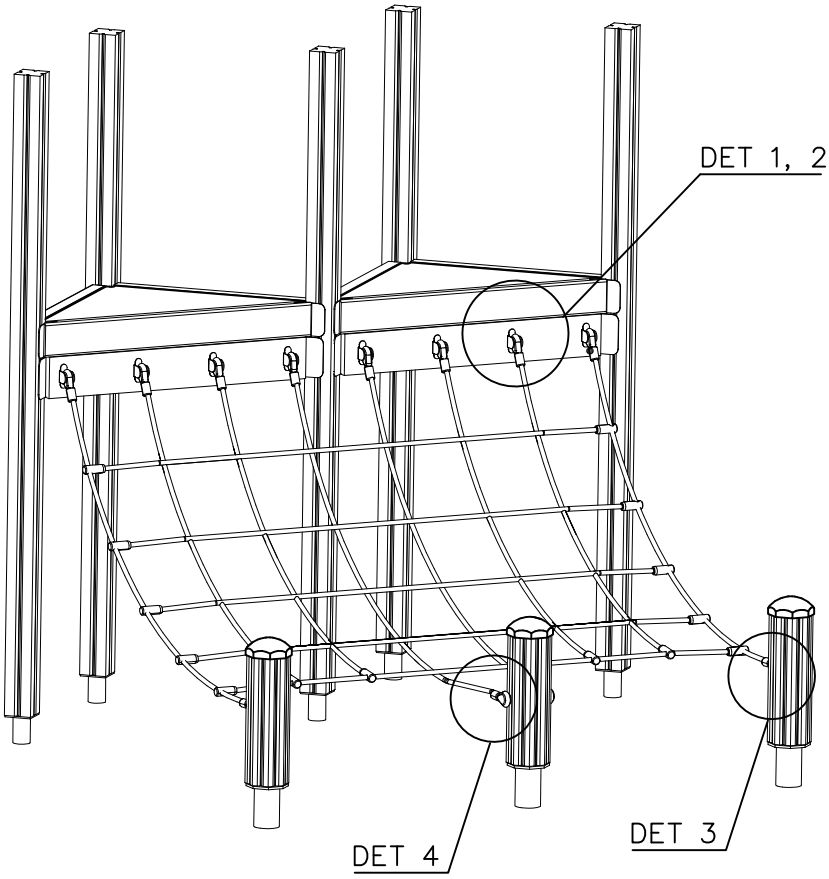

		PCS			PCS
1	901899	16	2	905051	16
	M8x45			Ø24/8.4	
3	980150	16	4	905103	16
	M8			PT-28/32-H	
6	903093	6	7	909256	16
	Ø8x90			Ø16/8.4	

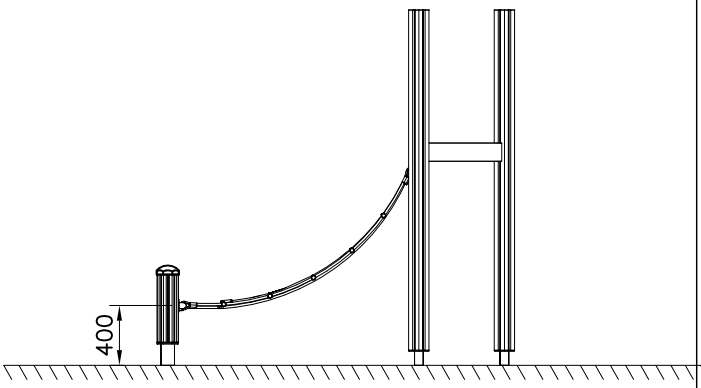

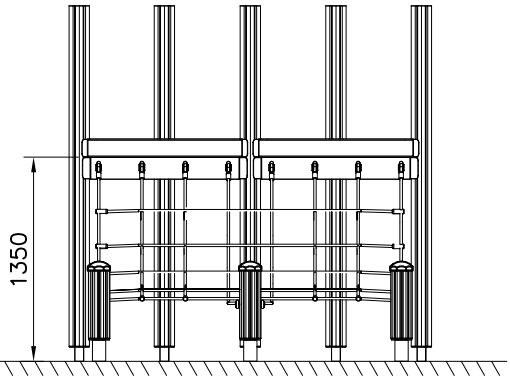

Copyright Lappset Group Ltd

LAPPSET®

707615

FINNO

3.6.2016

DET 1

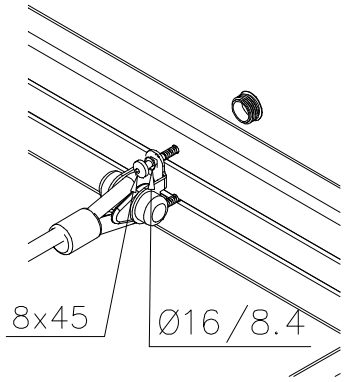

DET 2

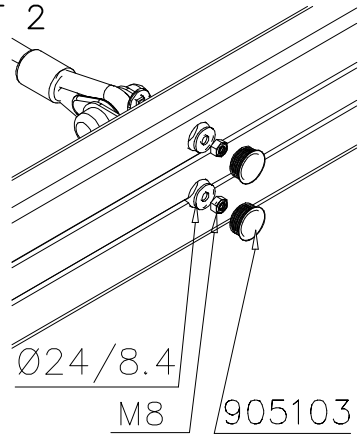

DET 3

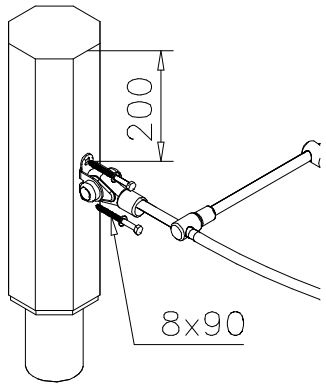

DET 4

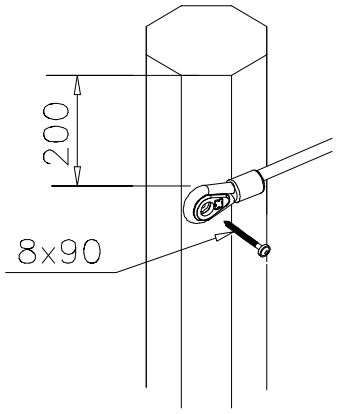

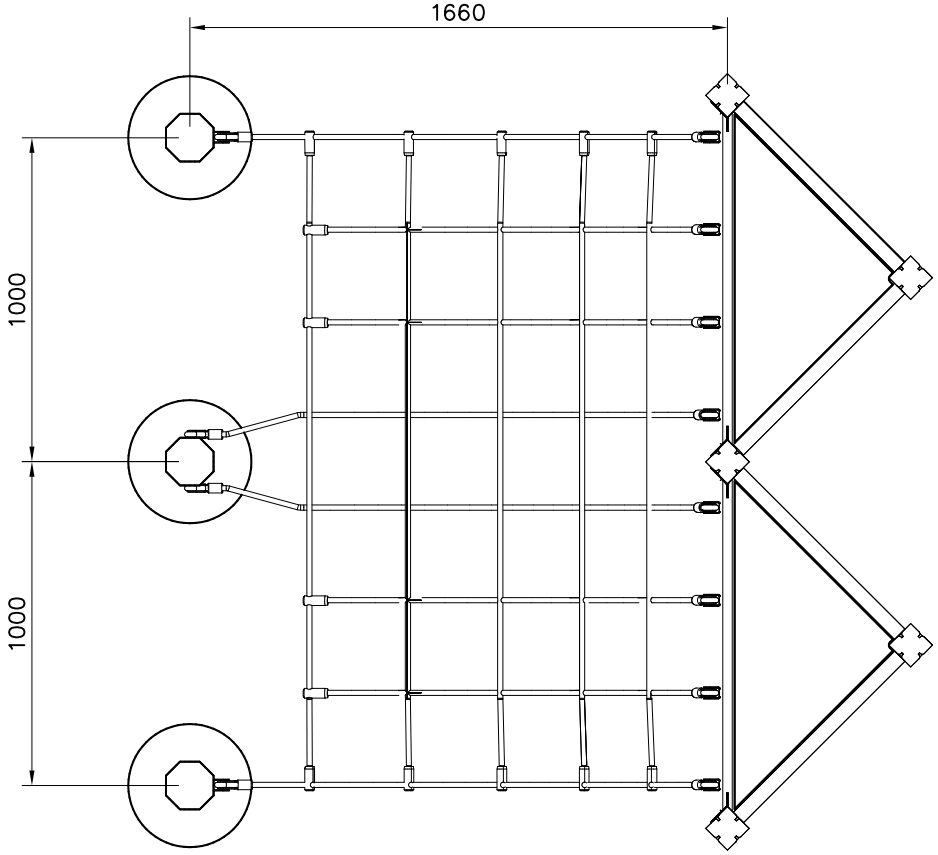

Copyright 1998 Lappset Group Ltd

LAPPSET®

707625

FINNO

DATE: 8.6.2017

OPTION 1. No wall on the sides

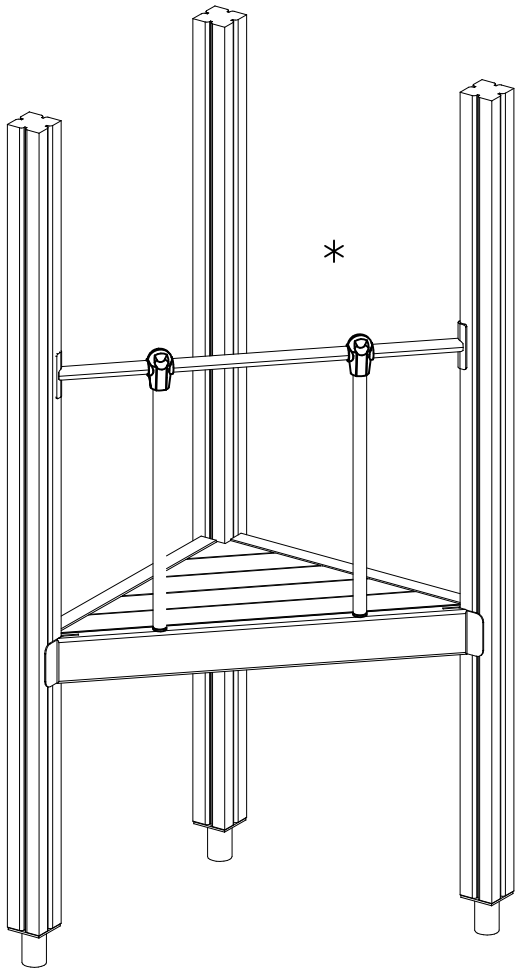

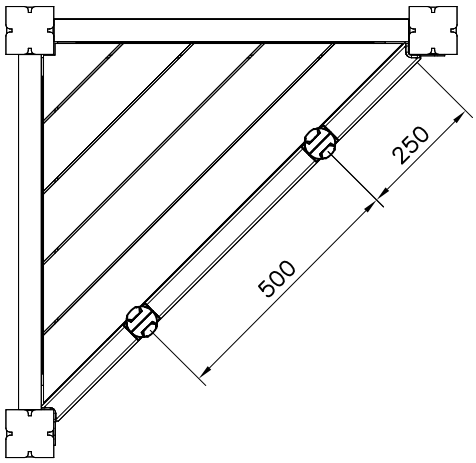

1 980128	PCS 4	2 909256	PCS 4
93x93x2150		Ø16/8.4	
3 908057	PCS 2	4 903093	PCS 2
Ø32/29–L5/30		Ø8x90	
5 900342	PCS 4	6 901900	PCS 4
M8x16		20.5x36.2x56	
7 909850	PCS 2	8 980150	PCS 2
M8x25		M8	
9 901182	PCS 2	10 901902	PCS 4
Ø11/M8x40		30.7x60.9x100	
	PCS		PCS
	PCS		PCS
○ 908044	PCS 2	○ 907920	PCS 1
Ø33.7x679			

Copyright Lappset Group Ltd

LAPPSET®

707625

FINNO

DATE: 8.6.2017

OPTION 2. Wall on either side (move vertical bar 70mm)

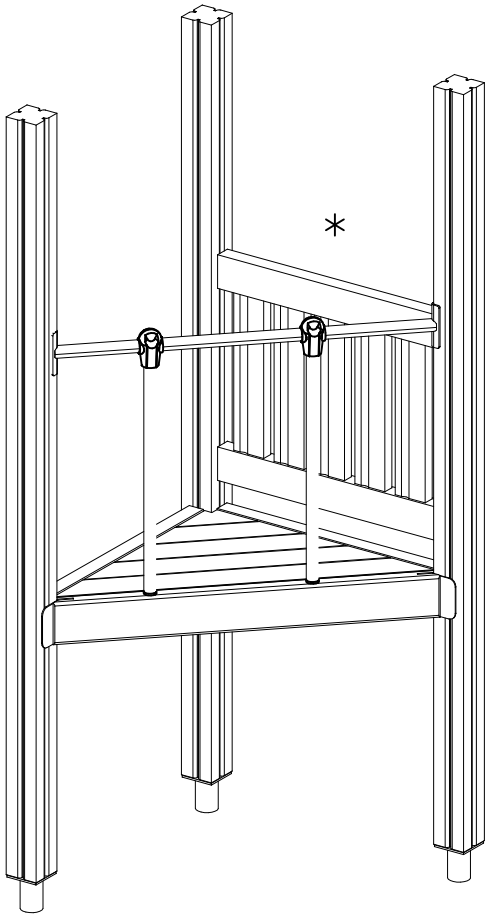

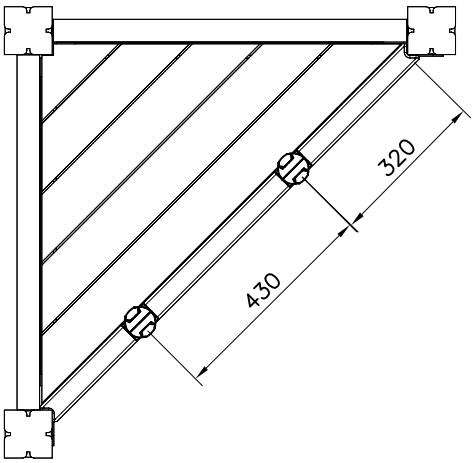

Copyright Lappset Group Ltd

LAPPSET®

707625

FINNO

DATE: 8.6.2017

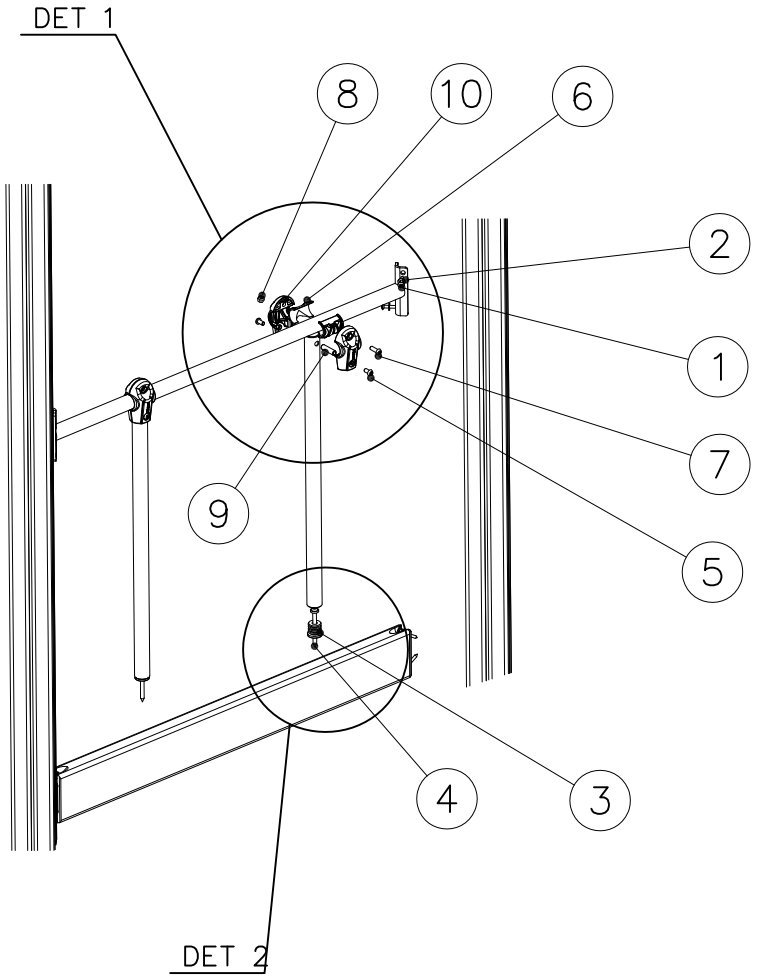

DET 1

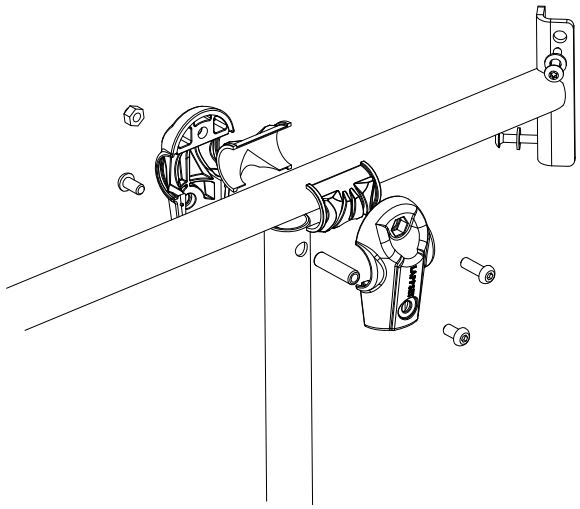

DET 2

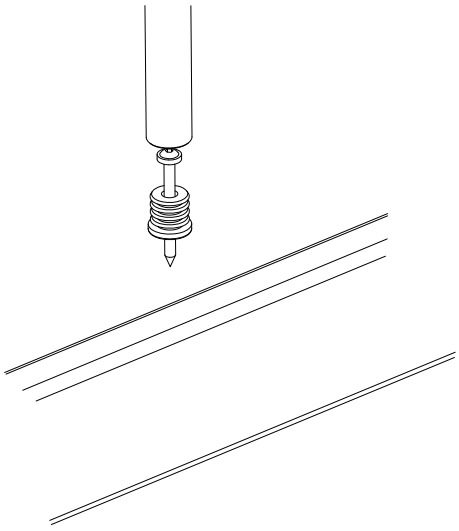

Copyright 1998 Lappset Group Ltd

LAPPSET®

FANTASIA

707640

DATE: 13.4.2016

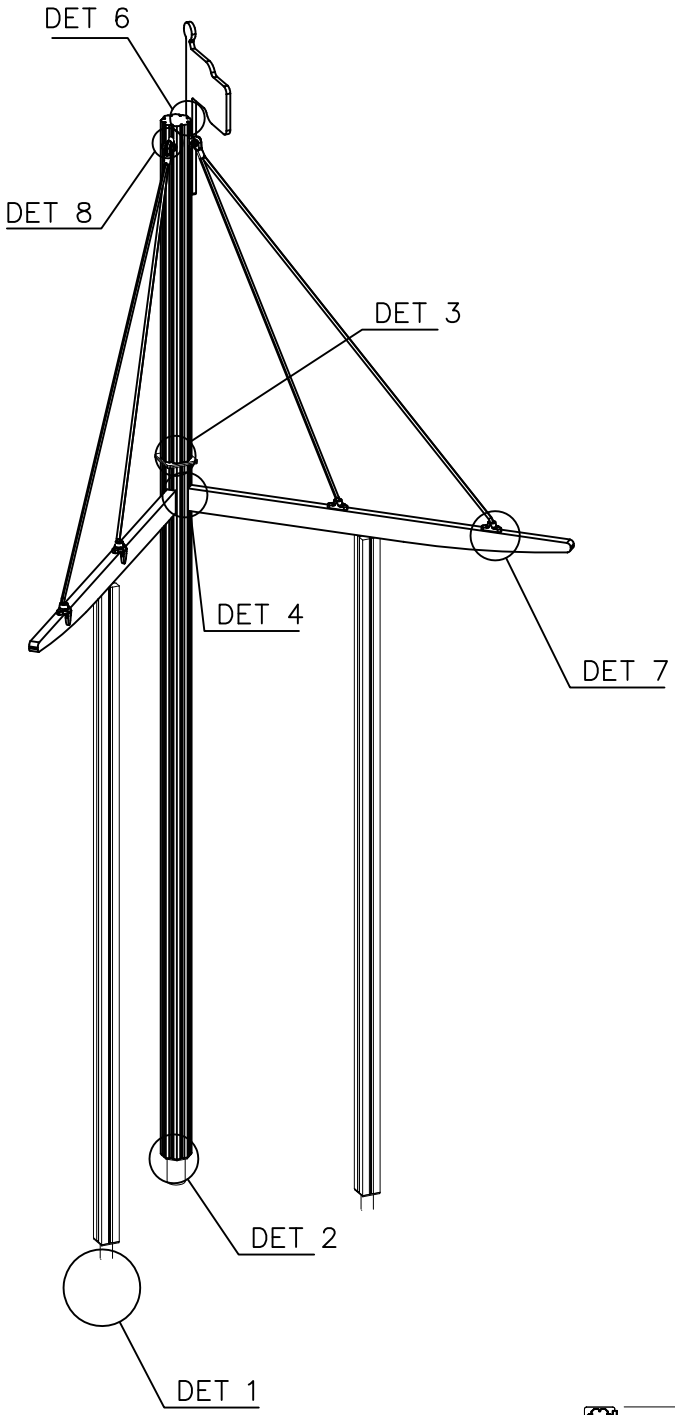

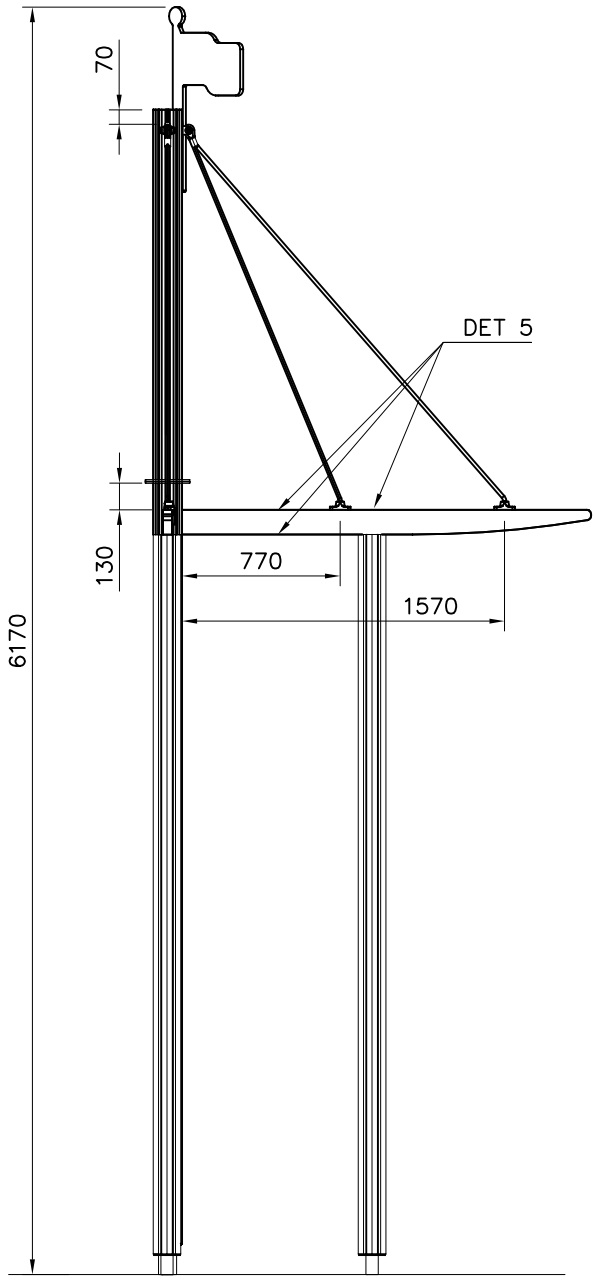

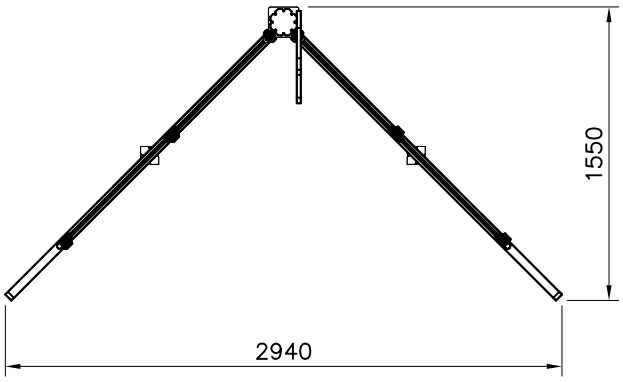

Copyright Lappset Group Ltd

LAPPSET®

707640

FANTASIA

DATE: 13.4.2016

1 704944	PCS 2	2 707611	PCS 2		17 909097	PCS 2	18 909230 PCS 2
45x120x2000					M8x60		8x150
3 707619	PCS 1	4 707620	PCS 1		19 909349	PCS 4	20 909561 PCS 2
140x140x3700		140x140x1800			M12x40		
5 707621	PCS 1	6 900240	PCS 3		21 980123	PCS 12	22 980128 PCS 4
21x489x900		Ø8x70			Ø7x60		Ø7x40
7 902234	PCS 4	8 903093	PCS 4		23 980150	PCS 2	24 980151 PCS 8
M12		Ø8x90			M8		Ø16/8.4
9 903113	PCS 1	10 903533	PCS 2		25 980165	PCS 8	PCS
1050		SRL12 TO Ø9			Ø24/13		
11 905051	PCS 2	12 905083	PCS 4			PCS	PCS
Ø24/8.4		Ø32					
13 905103	PCS 4	14 905104	PCS 8			PCS	PCS
PT-28/32-H		M10					
15 905112	PCS 4	16 908058	PCS 2			PCS	PCS
Ø22		8x160x160					

Copyright 1998 Lappset Group Ltd

LAPPSET®

707640

FANTASIA

DATE: 13.4.2016

DET 1

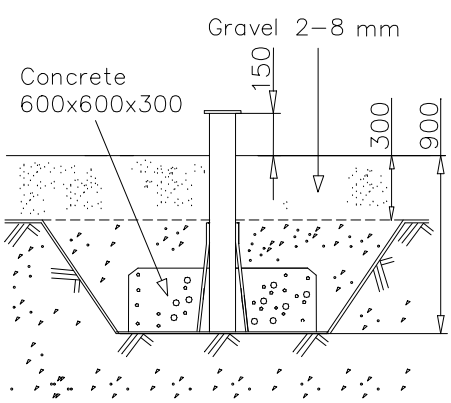

DET 2

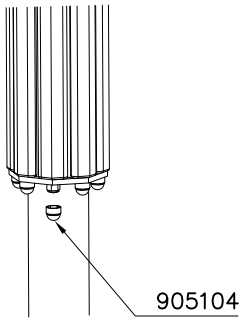

DET 3

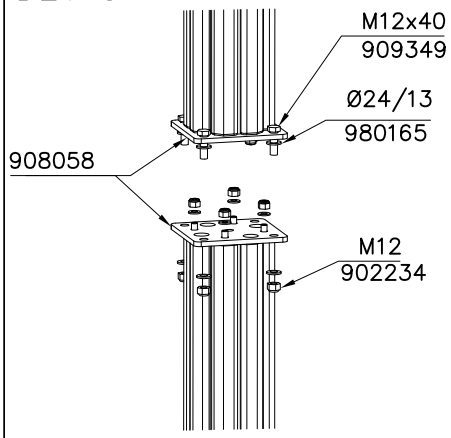

DET 4

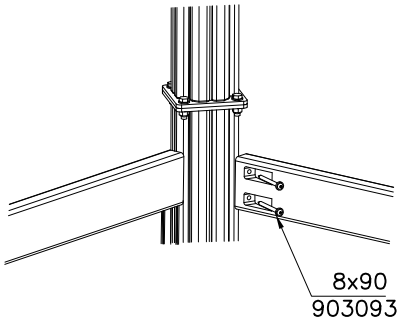

DET 5

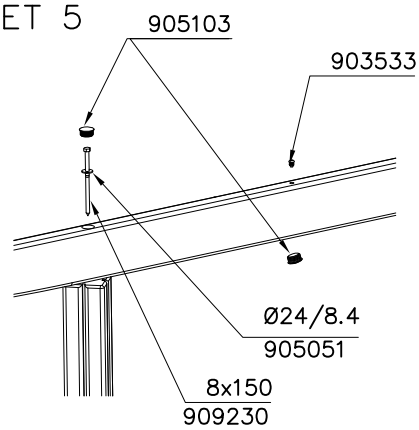

DET 6

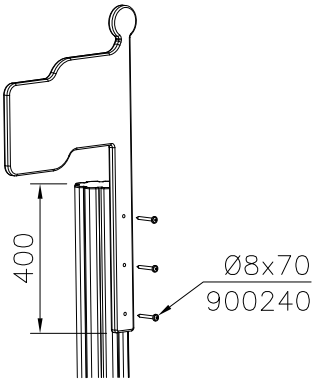

DET 7

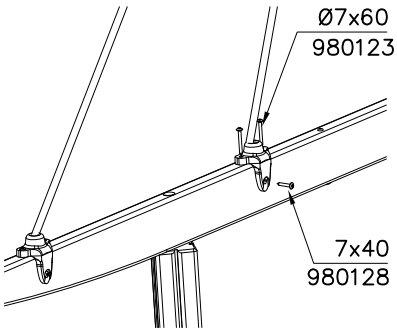

DET 8

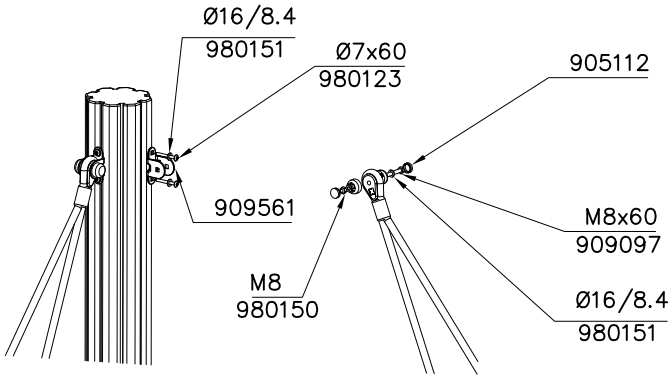

Copyright 1998 Lappset Group Ltd

LAPPSET®

707680

FINNO

DATE: 8.4.2016

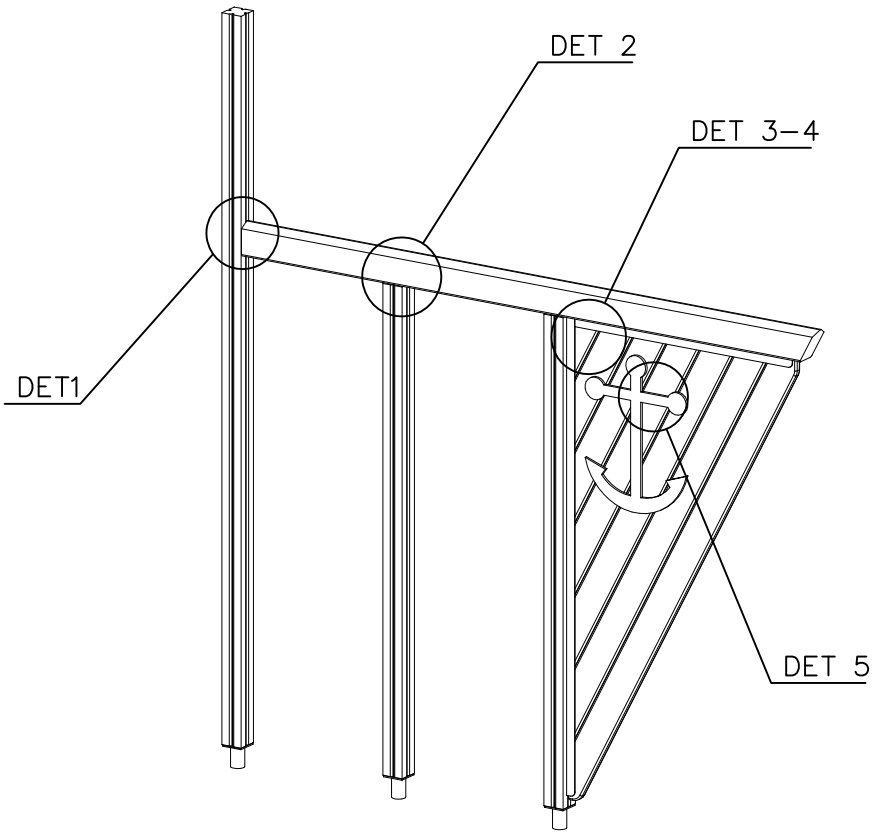

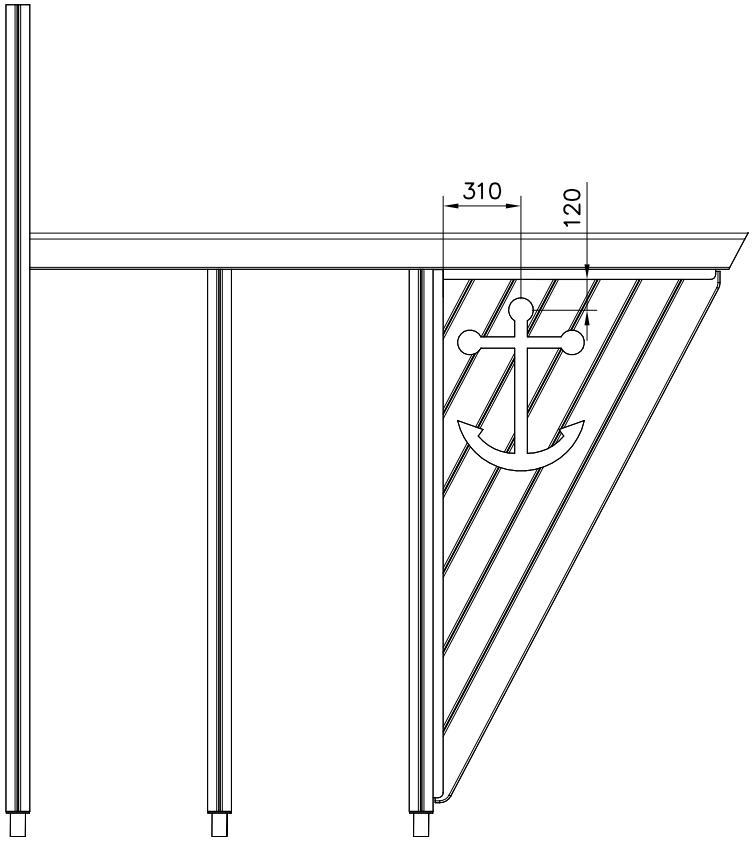

1	980122	PCS	2	980131	PCS
		14			10
	Ø5x30			Ø6x60	
3	980128	PCS	4	903093	PCS
		12			2
	Ø7x40			Ø8x90	
5	909230	PCS	6	905051	PCS
		2			2
	8x150			Ø24/8.4	
7	905103	PCS	8	906942	PCS
		2			2
	PT–28/32–H			IRR30601.5–3S	
		PCS			PCS
	704868	PCS		707633	PCS
		2			1
	12x503x687			90x145x2855	
	707653	PCS		929325	PCS
		1			1
	32x1130x2110			40x40x1080	
	929326	PCS			PCS
		1			
	40x40x3x2095				

Copyright Lappset Group Ltd

LAPPSET®

707680

FINNO

DATE: 8.4.2016

DET 1

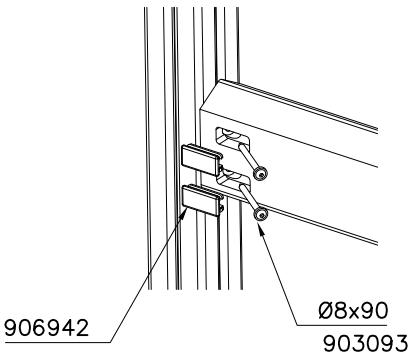

DET 2

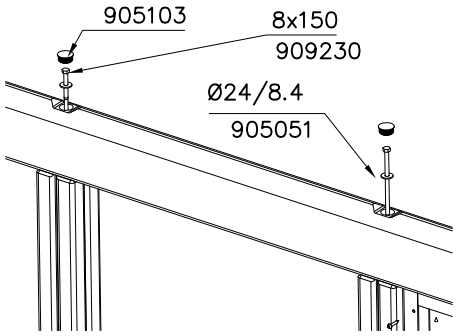

DET 3

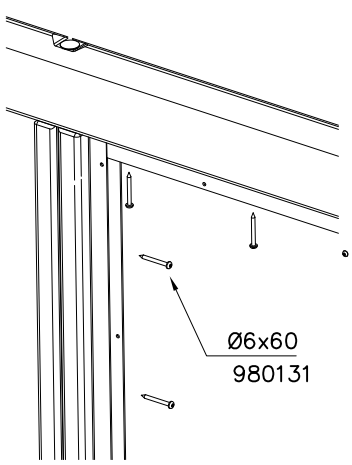

DET 4

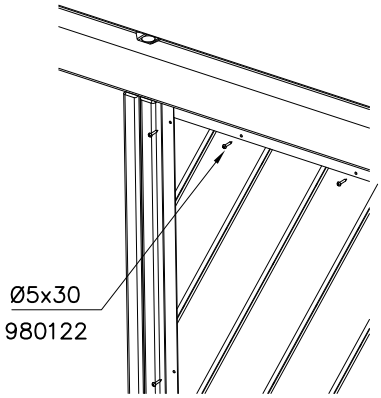

DET 5

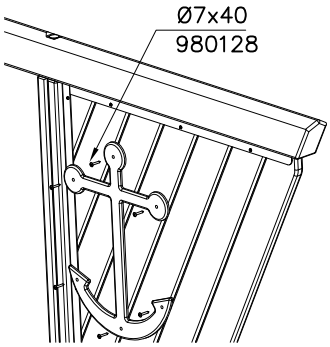

Copyright 1998 Lappset Group Ltd

LAPPSET®

GRIP

FINNO

DATE: 18.1.2016

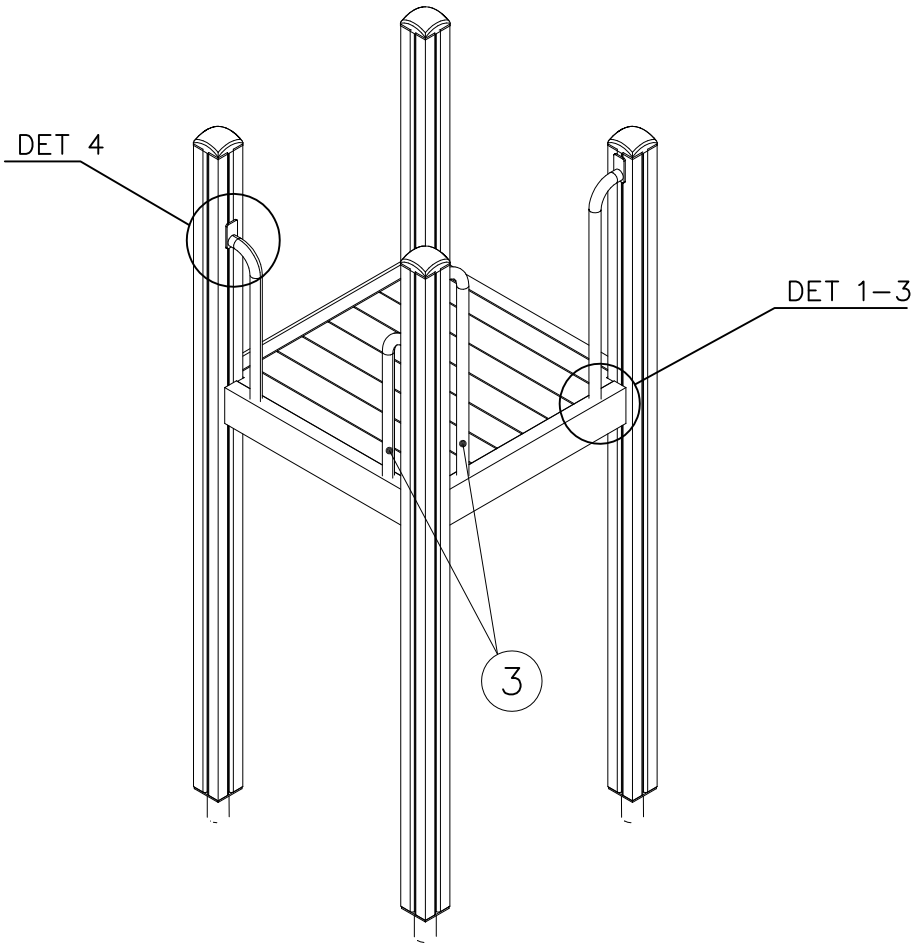

1 900240 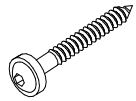 Ø8x70	PCS 1	2 900727 M10x80	PCS 1
	PCS		PCS
3 907688 765	PCS 1	3 907701 545	PCS 1
	PCS		PCS
	PCS		PCS
	PCS		PCS
	PCS		PCS
	PCS		PCS

DET 1

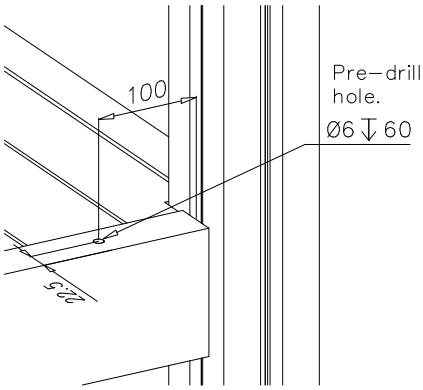

DET 2

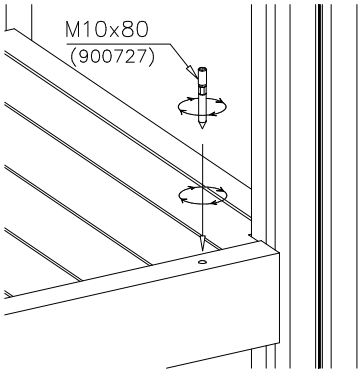

DET 3

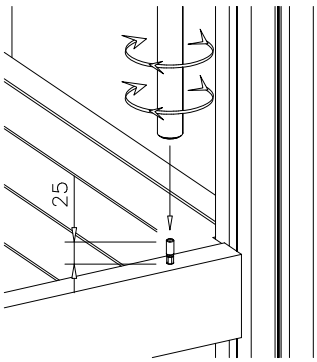

DET 4

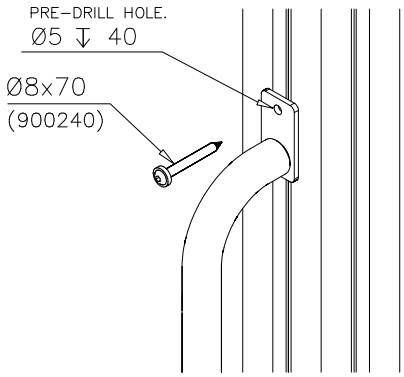

Copyright Lappset Group Ltd